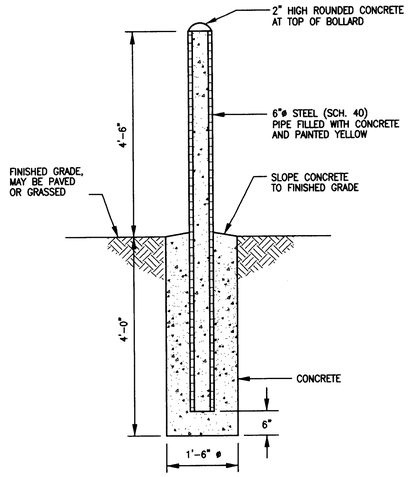

PIPE BOLLARD DETAIL (8 / A-2)
NOT TO SCALE
C-2,A-1

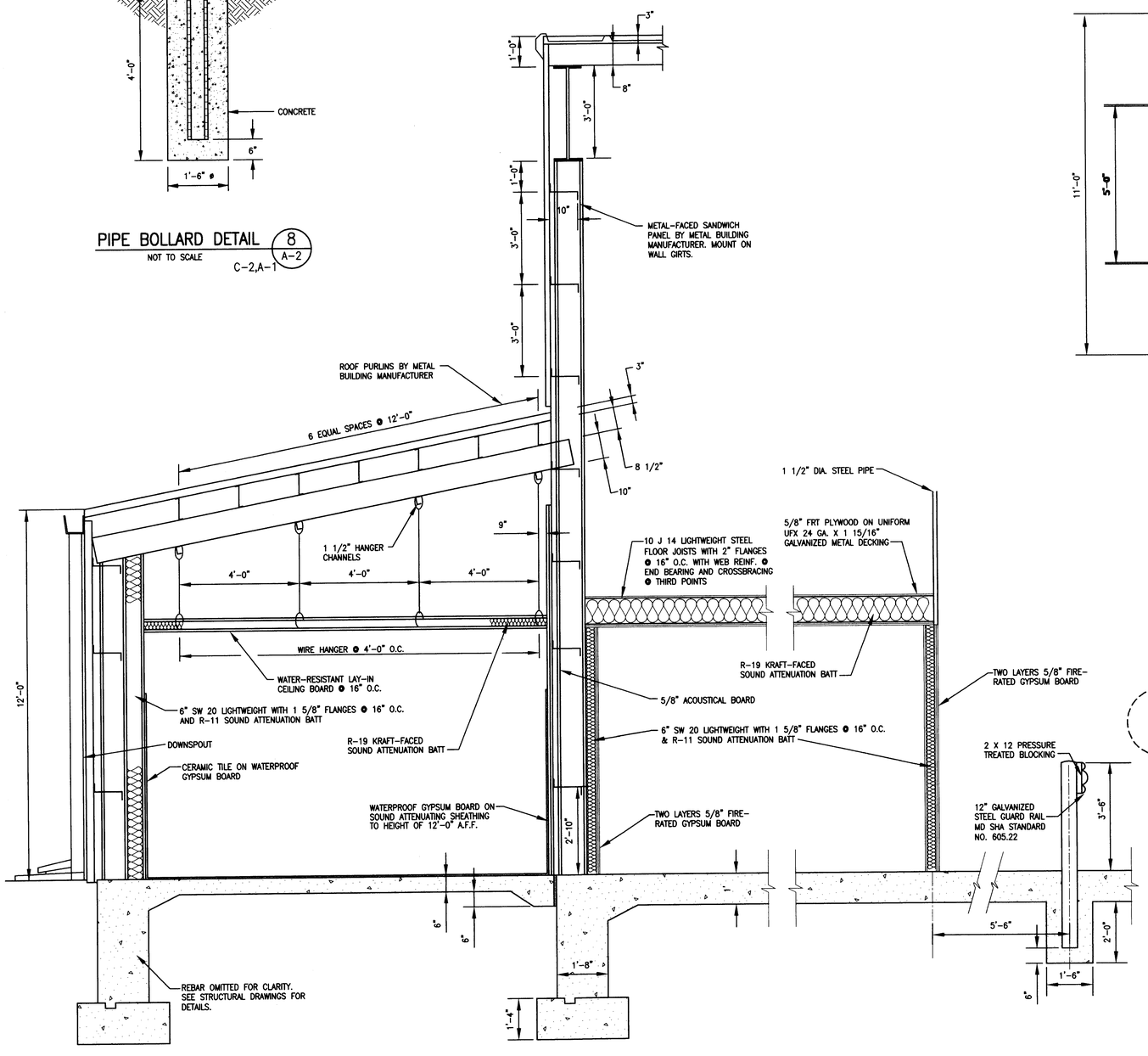

SECTION (A / A-1)
SCALE: 1/2"=1'-0"

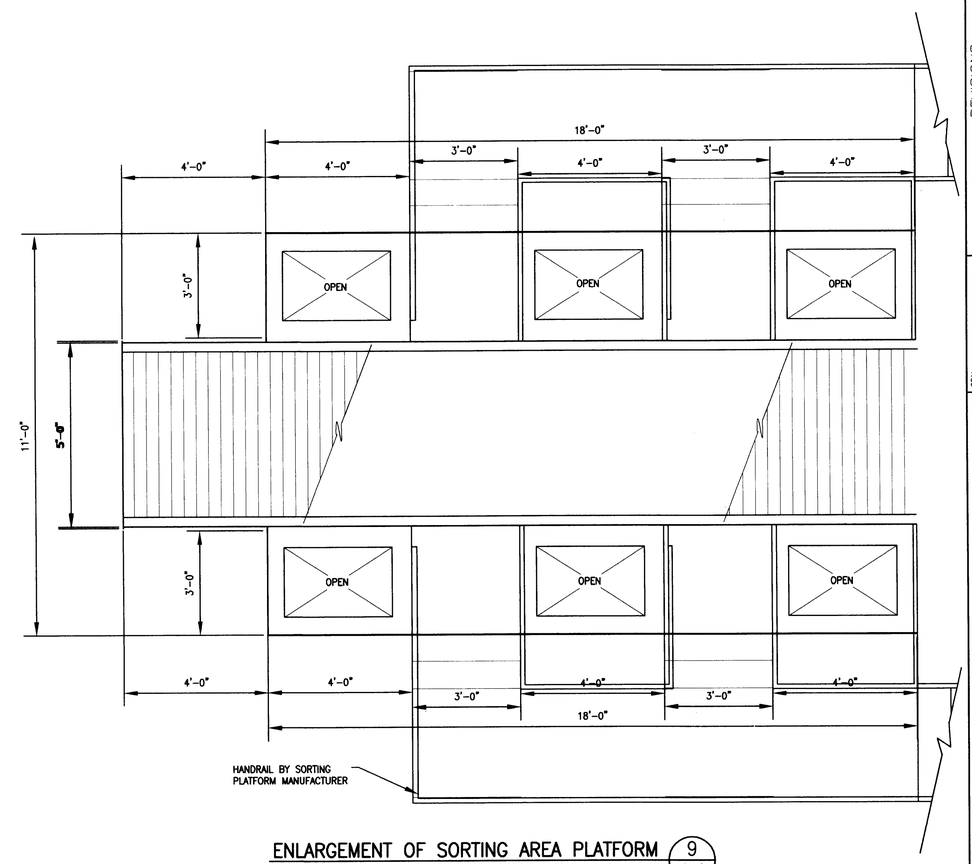

ENLARGEMENT OF SORTING AREA PLATFORM (9 / A-1)
SCALE: 1/2" = 1' - 0"

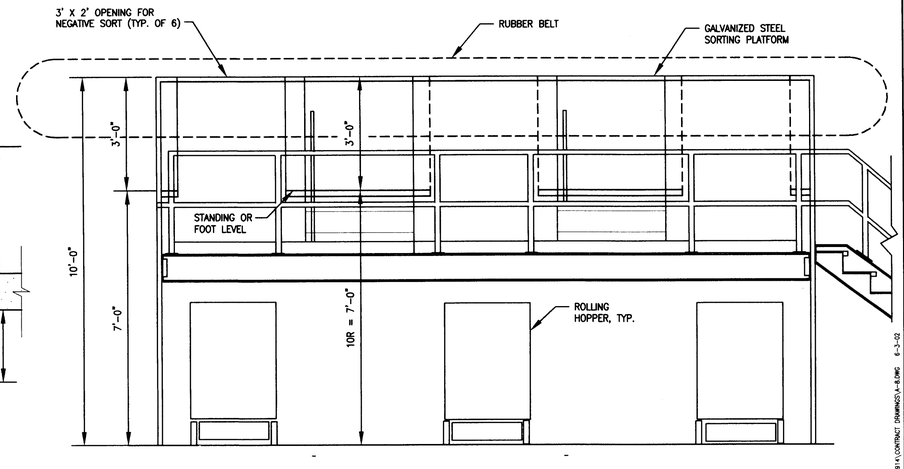

ELEVATION – SORTING AREA
SCALE: 1/2" = 1' - 0"

2 1 0 1 2 3
SCALE: 1/2" = 1'-0"

REVISIONS

NO.	DATE	BY	DESCRIPTION

SEAL

STATE OF MARYLAND GEORGE ERIK KVARNES REGISTERED PROFESSIONAL ENGINEER

CENTRAL LANDFILL FACILITY SITE
MUNICIPAL SOLID WASTE RECOVERY FACILITY
WORCESTER COUNTY, MARYLAND

CORE SECTION AND DETAILS

EA ENGINEERING, SCIENCE, AND TECHNOLOGY
Loveton Center
15 Loveton Circle
Sparks, Maryland 21152
(410) 771-4950

DATE	MAY 2002
DESIGNED BY	DOK
DRAWN BY	FDV
CHECKED BY	GAT
PROJECT MANAGER	GAT
PROJECT NUMBER	10609.14
SCALE	AS SHOWN
FILE NAME	A-8
DRAWING NUMBER	A-8
SHEET NUMBER	15 OF 31

FILE: (LOVETON) Q:\PROJECTS\10609.14\CONTRACT DRAWINGS\A-8.DWG 6-3-02