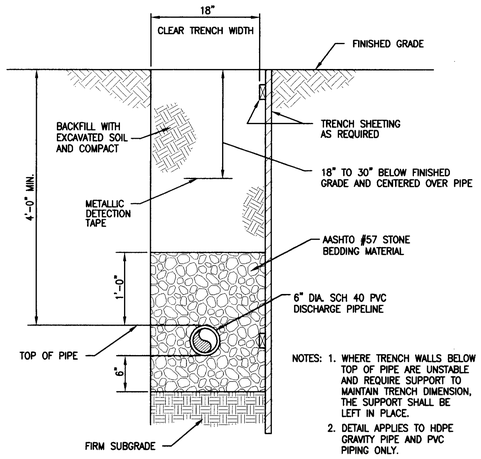

NOTES:
1. WHERE TRENCH WALLS BELOW TOP OF PIPE ARE UNSTABLE AND REQUIRE SUPPORT TO MAINTAIN TRENCH DIMENSION, THE SUPPORT SHALL BE LEFT IN PLACE.
2. DETAIL APPLIES TO HDPE GRAVITY PIPE AND PVC PIPING ONLY.

DISCHARGE PIPELINE BEDDING DETAIL (1 / C-2)
NOT TO SCALE

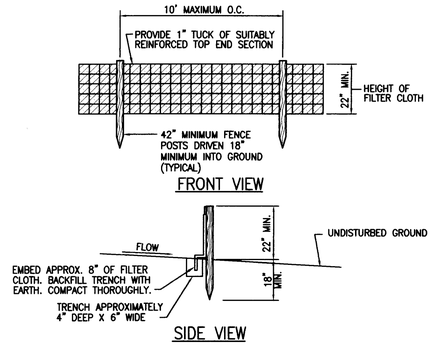

SILT FENCE DETAIL (2 / C-2)
NOT TO SCALE

NOTES:
1. FASTEN WOVEN WIRE FENCE TO FENCE POSTS WITH WIRE TIES OR STAPLES.
2. FASTEN FILTER CLOTH SECURELY TO WOVEN WIRE FENCE WITH TIES SPACED EVERY 24" AT TOP AND MID-SECTION.
3. WHEN TWO SECTIONS OF FILTER CLOTH ADJOIN EACH OTHER, THEY SHALL BE OVERLAPPED BY SIX INCHES AND FOLDED.
4. PERFORM MAINTENANCE AS NEEDED AND REMOVE MATERIAL WHEN "BULGES" DEVELOP IN THE SILT FENCE.
5. SILT FENCE TO BE PLACED COMPLETELY AROUND ALL STOCKPILES OF EXCAVATED MATERIALS.

MATERIALS:
POSTS:
STEEL EITHER T OR U TYPE OR 2" HARDWOOD
FILTER CLOTH:
WOVEN POLYPROPYLENE 2.5 OZ./SY, 12 MIL. THICK
PREFABRICATED UNIT:
EQUIPPED WITH WOODEN OR METAL POSTS, ONE POLE EVERY 6 FT, AND MEETING THE MATERIAL REQUIREMENTS ABOVE

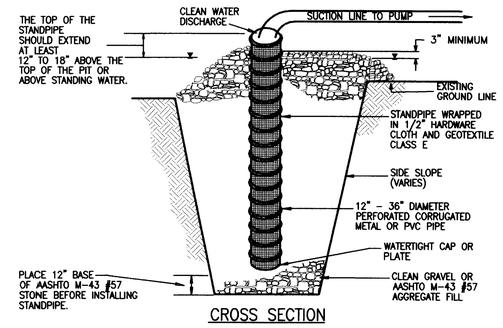

DEWATERING SUMP-FILTER DEVICE DETAIL (3 / C-2)
NOT TO SCALE

CONSTRUCTION SPECIFICATIONS
1. PIT DIMENSIONS ARE VARIABLE, WITH THE MINIMUM DIAMETER BEING 2 TIMES THE STANDPIPE DIAMETER.
2. THE STANDPIPE SHOULD BE CONSTRUCTED BY PERFORATING A 12" TO 24" DIAMETER CORRUGATED OR PVC PIPE, THEN WRAPPING WITH 1/2" HARDWARE CLOTH AND GEOTEXTILE CLASS E. THE PERFORATIONS SHALL BE 1/2" X 6" SLITS OR 1" DIAMETER HOLES.
3. A BASE OF FILTER MATERIAL CONSISTING OF CLEAN GRAVEL OR AASHTO #57 STONE SHOULD BE PLACED IN THE PIT TO A DEPTH OF 12". AFTER INSTALLING THE STANDPIPE, THE PIT SURROUNDING THE STANDPIPE SHOULD THEN BE BACKFILLED WITH THE SAME FILTER MATERIAL.
4. THE STANDPIPE SHOULD EXTEND 12" TO 18" ABOVE THE LIP OF THE PIT OR THE RISER CREST ELEVATION (BASIN DEWATERING ONLY) AND THE FILTER MATERIAL SHOULD EXTEND 3" MINIMUM ABOVE THE ANTICIPATED STANDING WATER ELEVATION.

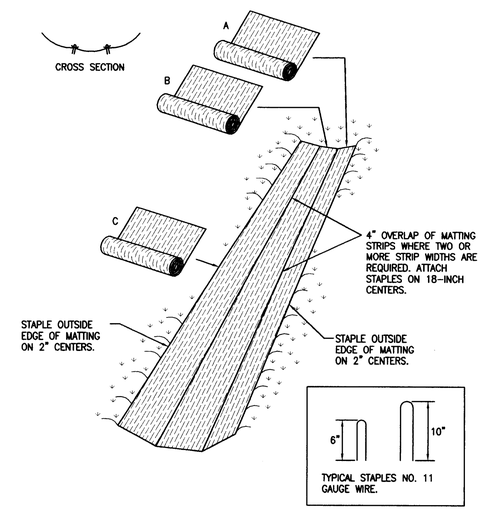

CONSTRUCTION SPECIFICATIONS
1. KEY-IN MATTING BY PLACING THE TOP ENDS OF THE MATTING IN A NARROW TRENCH (6" IN DEPTH). BACKFILL THE TRENCH AND TAMP FIRMLY TO CONFORM TO THE CHANNEL CROSS SECTION SECURE WITH A ROW OF STAPLES ABOUT 4" DOWN SLOPE FROM THE TRENCH. SPACING BETWEEN STAPLES SHALL BE 6".
2. STAPLE THE 4" OVERLAP IN THE CHANNEL CENTER USING AN 18" SPACING BETWEEN STAPLES.
3. BEFORE STAPLING THE OUTER EDGES OF THE MATTING, MAKE SURE THE MATTING IS SMOOTH AND IN FIRM CONTACT WITH THE SOIL.
4. STAPLES SHALL BE PLACED 2 FT APART WITH 4 ROWS FOR EACH STRIP, 2 OUTER ROWS, AND 2 ALTERNATING ROWS DOWN THE CENTER.
5. WHERE ONE ROLL OF MATTING ENDS AND ANOTHER BEGINS, THE END OF THE TOP STRIP SHALL OVERLAP THE UPPER END OF THE LOWER STRIP BY 4", SHIPLAP FASHION. REINFORCE THE OVERLAP WITH A DOUBLE ROW OF STAPLES SPACED 6" APART IN A STAGGERED PATTERN ON EITHER SIDE.
6. THE DISCHARGE END OF THE MATTING LINER SHOULD BE SIMILARLY SECURED WITH 2 DOUBLE ROWS OF STAPLES.

NOTE: IF FLOW WILL ENTER FROM THE EDGE OF THE MATTING THEN THE AREA AFFECTED BY THE FLOW MUST BE KEYED-IN.

EROSION CONTROL MATTING DETAIL (4 / C-2)
NOT TO SCALE

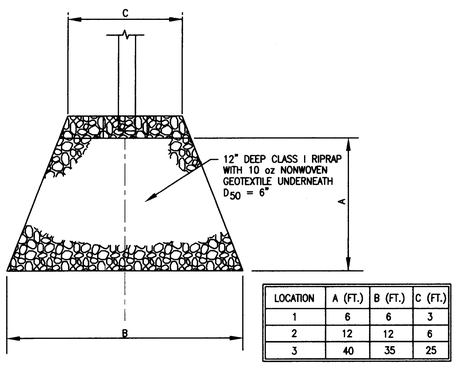

LOCATION	A (FT.)	B (FT.)	C (FT.)
1	6	6	3
2	12	12	6
3	40	35	25

RIPRAP APRON DETAIL (5 / C-2)
NOT TO SCALE

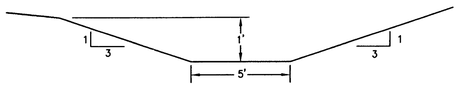

GRASS CHANNEL DETAIL (7 / C-2)
NOT TO SCALE

NOTE: CONTRACTOR SHALL PROVIDE CLEAN-OUT MARKERS AT A MINIMUM OF EVERY 200 FT ALONG LENGTH OF GRASS CHANNEL. CLEAN-OUT MARKERS SHALL CONSIST OF STEEL PIPE, CONCRETE PAD, OR OTHER APPROVED EQUAL.

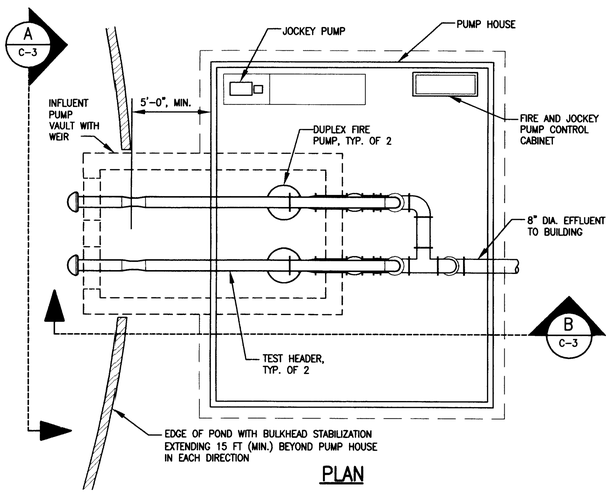

NOTES FOR FIRE PROTECTION PUMP HOUSE AND PUMP VAULT
1. CONTRACTOR SHALL PROVIDE SHEET PILE BULKHEAD OR OTHER SUITABLE STRUCTURE FOR STABILIZATION OF THE SHORELINE AND PROTECTION OF THE PROPOSED FIRE PUMP HOUSE.
2. FIRE PUMP HOUSE AND PUMP VAULT SHALL BE CONSTRUCTED ALONG THE EXISTING POND EMBANKMENT. LOCATION ON SITE PLAN IS APPROXIMATE AND TO BE DETERMINED IN THE FIELD.
3. CONTRACTOR SHALL BE RESPONSIBLE FOR DEWATERING THE EXCAVATION, AND MAINTAINING DEWATERING ACTIVITIES UNTIL THE CONSTRUCTION OF THE PUMP HOUSE AND PUMP VAULT ARE COMPLETE. DEWATERING SHALL BE INCIDENTAL TO THE CONSTRUCTION.

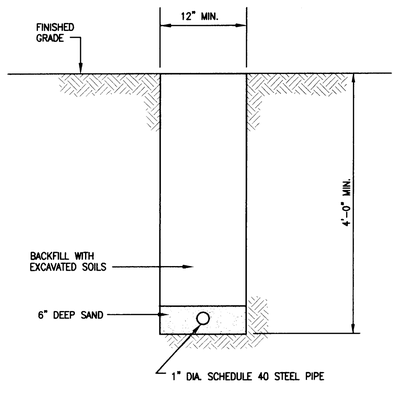

DOMESTIC WATER PIPE TRENCH DETAIL (6 / C-2)
NOT TO SCALE

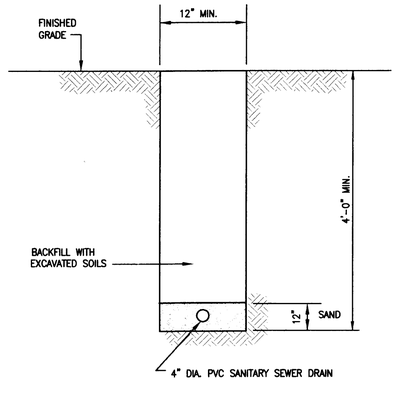

4" DIA. SANITARY DRAIN TRENCH DETAIL (8 / C-2)
NOT TO SCALE

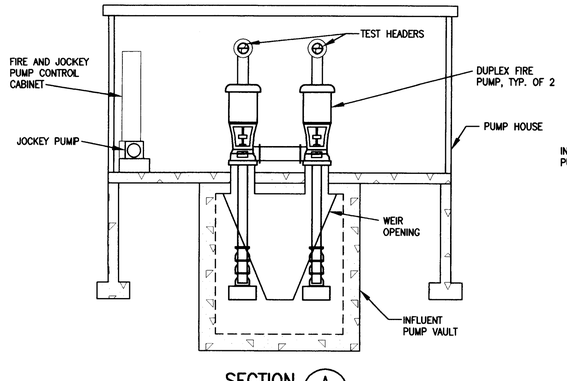

SECTION (A / C-3)
NOT TO SCALE

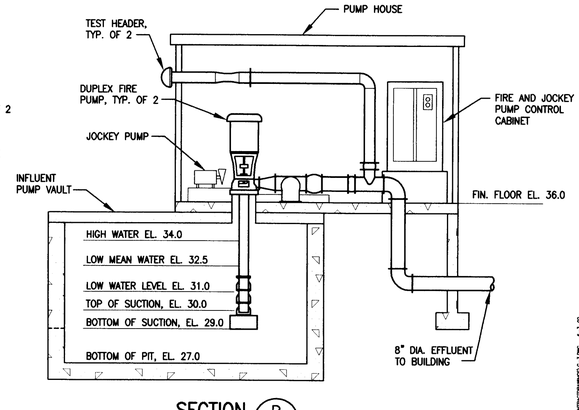

SECTION (B / C-3)
NOT TO SCALE

FIRE PROTECTION PUMP HOUSE AND SUMP DETAIL (9 / C-2)
NOT TO SCALE

REVISIONS

NO.	DATE	BY	DESCRIPTION

SEAL

CENTRAL LANDFILL FACILITY SITE
MUNICIPAL SOLID WASTE RECOVERY FACILITY
WORCESTER COUNTY, MARYLAND

EROSION AND SEDIMENT CONTROL DETAILS

EA ENGINEERING, SCIENCE, AND TECHNOLOGY,
Loveton Center
15 Loveton Circle
Sparks, Maryland 21152
(410) 771-4950

DATE	MAY 2002
DESIGNED BY	DOK
DRAWN BY	DOK
CHECKED BY	GAT
PROJECT MANAGER	GAT
PROJECT NUMBER	10609.14
SCALE	AS SHOWN
FILE NAME	C-3
DRAWING NUMBER	C-3
SHEET NUMBER	4 OF 31

FILE: (LANDFILL) Q:\PROJECTS\10609.14\CONTRACT\DRAWINGS\C-3.DWG 6-3-02