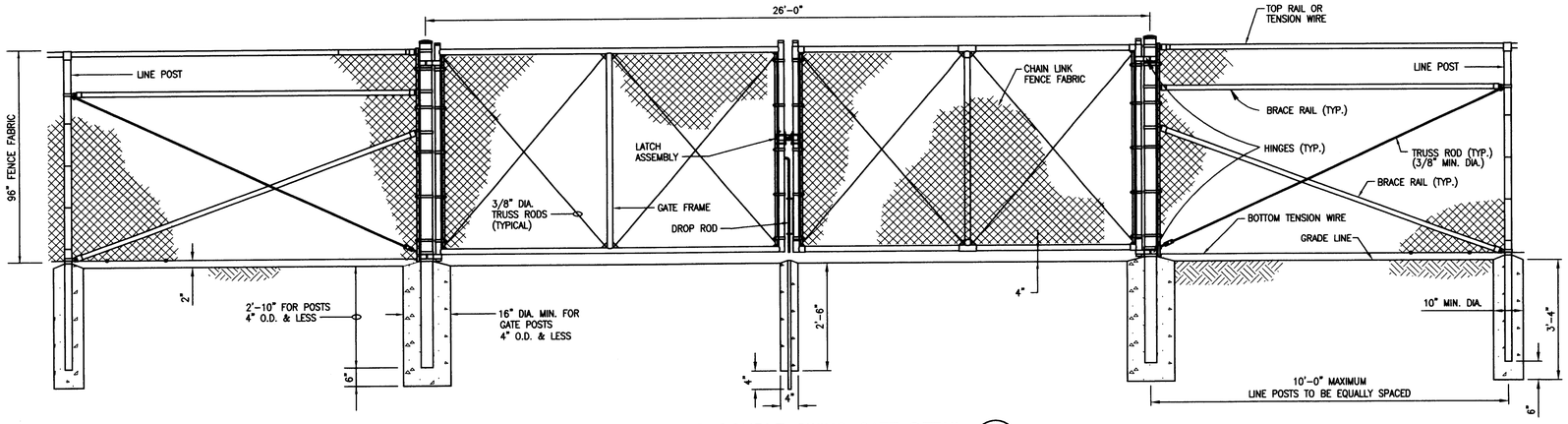

PERIMETER FENCE AND DOUBLE SWING GATE DETAIL (10 / C-2)

NOT TO SCALE

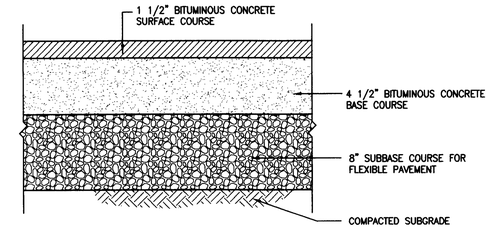

TYPICAL PAVEMENT DETAIL (11 / C-2)

NOT TO SCALE

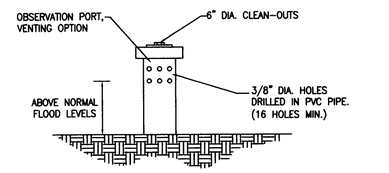

VENTING OPTION DETAIL

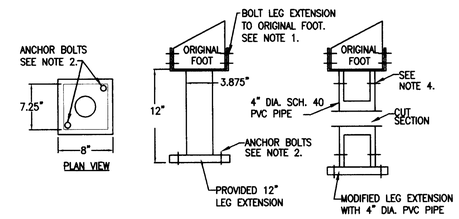

LEG EXTENSION OPTION

NOTES:

1. SECURE ORIGINAL 7" X 7" FOOT TO LEG EXTENSION BY PLACING TWO (2) SCREWS IN EACH SIDE OF THE LEG EXTENSION. EIGHT (8) SCREWS PER FOOT ARE INCLUDED AND SHOULD BE USED ON EACH OF THE FOUR (4) CORNER LEG EXTENSIONS.
2. ANCHOR THE LEG EXTENSIONS (4 CORNER LEGS ONLY) TO THE BASE OF THE TANK. PLACE BOLTS AT OPPOSITE CORNERS OF THE LEG EXTENSION BASE.
3. TO ELONGATE FOOT PAST THE PROVIDED 12", CUT THE 3.9" LEG EXTENSION IN THE CENTER INTO TWO SEPARATE PIECES. THEN CUT A SCH 40 PVC PIPE TO THE DESIRED LENGTH AND SLIP THE PIPE OVER THE TOP AND BOTTOM CUT SECTIONS OF THE LEG EXTENSIONS.
4. ATTACH PIPES WITH STAINLESS STEEL SCREWS.
5. ACCESS PORTS MAY BE USED AS VENT. CAP PIPES WITH 6" PVC CLEANOUT. DRILL 16 HOLES MIN. IN 6" PIPE JUST BELOW THE PVC CAP OR IN THE CAP.

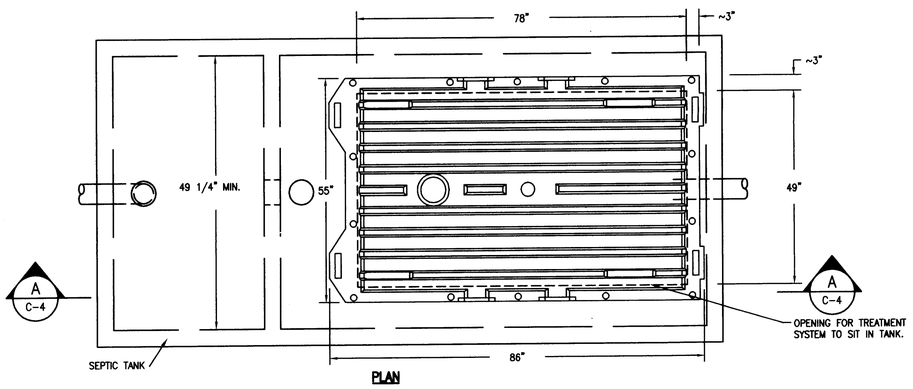

PLAN

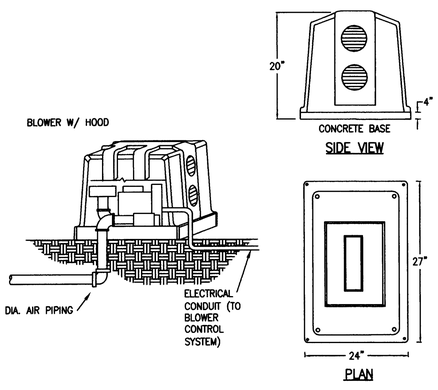

BLOWER HOUSING DIMENSIONS

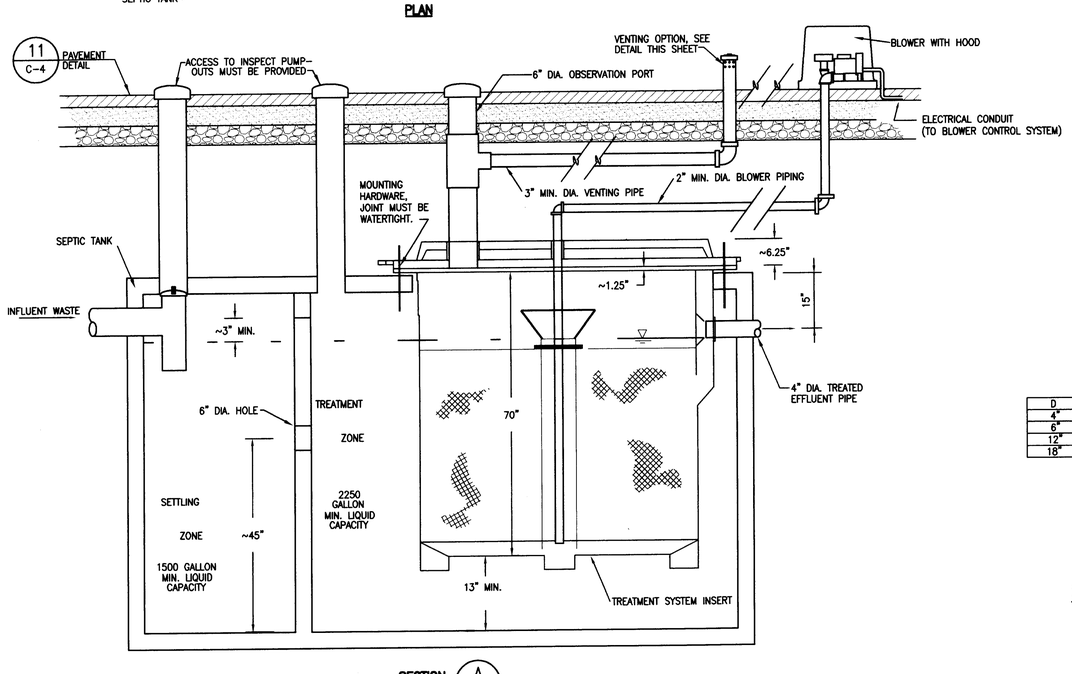

SECTION (A / C-4)

SEPTIC TANK AND SANITARY TREATMENT PACKAGE SYSTEM DETAIL (12 / C-2)

NOT TO SCALE

TABLE 1

D	A	W
4"	3"	12"
6"	4"	11"
12"	5"	8"
18"	6"	8"

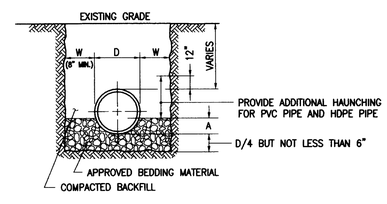

NOTE: CONTRACTOR TO PROVIDE SHEETING, SHORING AND BRACING IN CONFORMANCE WITH OSHA REQUIREMENTS.

STORM WATER PIPE TRENCH DETAIL (13 / C-2)

NOT TO SCALE

NOTE: REFER TO TABLE 1 FOR DIMENSIONS

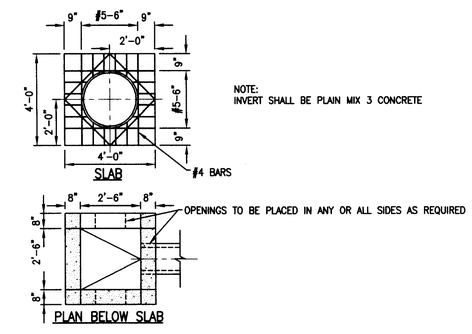

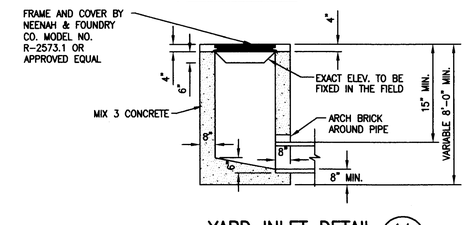

YARD INLET DETAIL (14 / C-2)

NOT TO SCALE

NO.	DATE	BY	DESCRIPTION

REVISIONS

SEAL

STATE OF MARYLAND — GEORGE A. KNAPP — REGISTERED PROFESSIONAL ENGINEER — No. 19324

CENTRAL LANDFILL FACILITY SITE
MUNICIPAL SOLID WASTE RECOVERY FACILITY

WORCESTER COUNTY, MARYLAND

CIVIL DETAILS

EA ENGINEERING, SCIENCE, AND TECHNOLOGY,
Loveton Center
15 Loveton Circle
Sparks, Maryland 21152
(410) 771-4950

DATE	MAY 2002
DESIGNED BY	DOK
DRAWN BY	DOK
CHECKED BY	GAT
PROJECT MANAGER	GAT
PROJECT NUMBER	10609.14
SCALE	AS SHOWN
FILE NAME	C-4
DRAWING NUMBER	C-4
SHEET NUMBER	5 OF 31

FILE: (LOVETON) Q:\PROJECTS\10609\1\CONTRACTDWG\REC\C-1.DWG 6-3-02