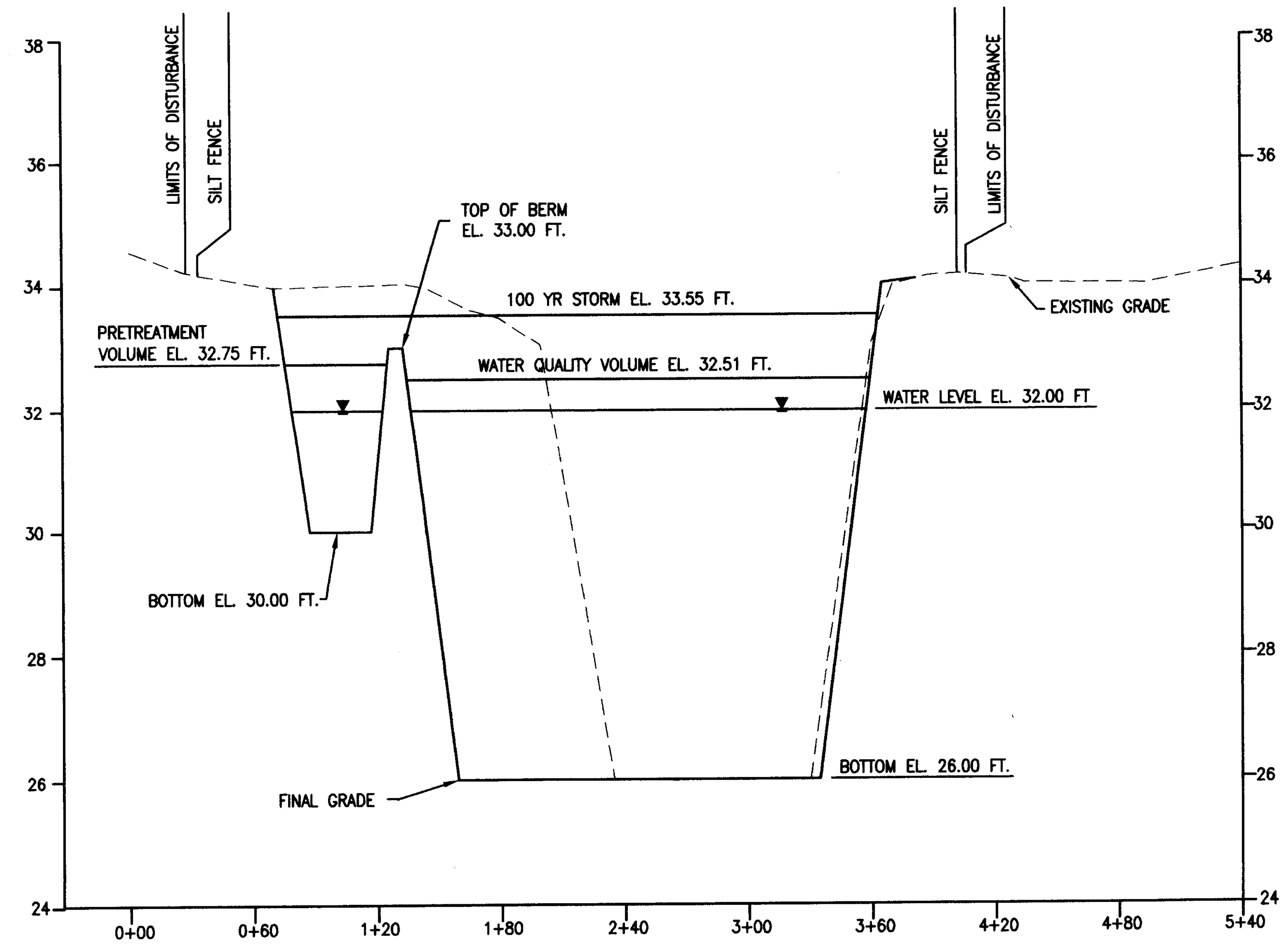

CROSS SECTION (A / C-2)

SCALE: HORIZ.: 1" = 60'
VERT.: 1" = 2'

NOTE: WATER LEVEL ELEVATION IS APPROXIMATE AND MAY VARY BASED ON SEASON AND WEATHER FLUCTUATIONS.

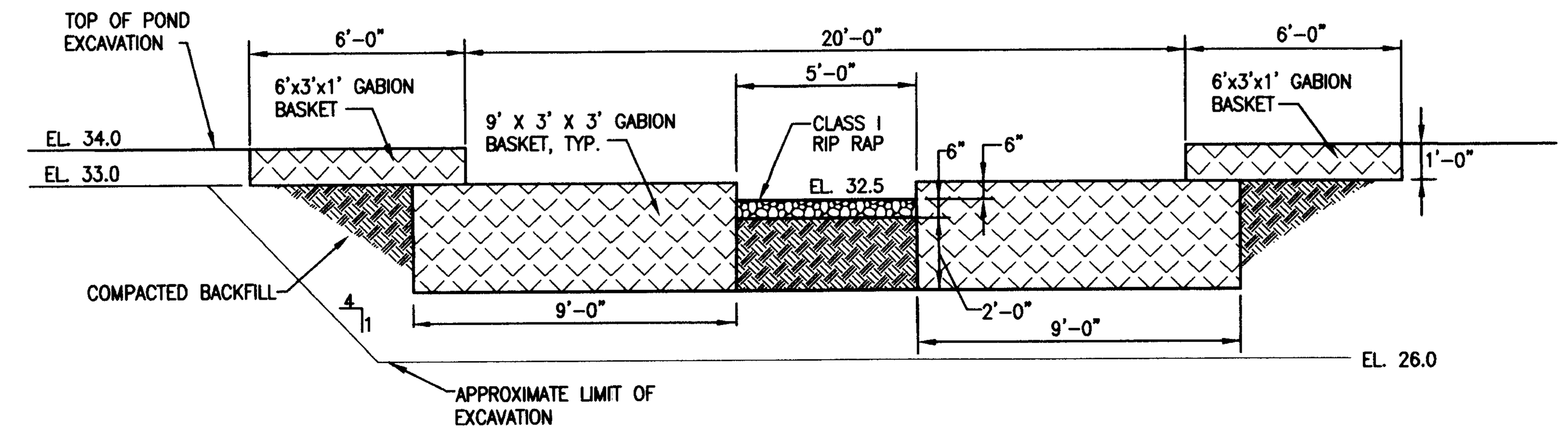

GABION BASKET STEPPED WEIR DETAIL (15 / C-2)

SCALE: 1" = 4'

NOTE: GABIONS IN CONTACT WITH EARTH ARE TO BE WRAPPED WITH A GEOTEXTILE

STORMWATER MANAGEMENT SUMMARY TABLE

MINIMUM SIZING CRITERIA	SYMBOL	VOLUME REQUIRED (ACRE-FEET)	SWM PRACTICE	NOTES
WATER QUALITY VOLUME	(WQ_V)	0.474	FOREBAY/STORMWATER POND	WATER QUALITY VOLUME IS ACHIEVED WITHIN THE POND AND FOREBAY
RECHARGE VOLUME	(RE_V)	0.0881	FOREBAY/STORMWATER POND	RE IS INCLUDED WITHIN THE WQ STORAGE
CHANNEL PROTECTION STORAGE VOLUME	(CP_V)	N/A	N/A	NOT REQUIRED FOR MARYLAND EASTERN SHORE. 2 YEAR RELEASE RATE IS 19.4 CFS
OVERBANK FLOOD PROTECTION	(Q_{P10})	0.70	STORMWATER POND	SAFE PASSAGE FOR THE 10-YEAR STORM EVENT IS PROVIDED
EXTREME FLOOD	(Q_F)	N/A	N/A	SAFE PASSAGE FOR THE 100-YEAR STORM EVENT IS PROVIDED

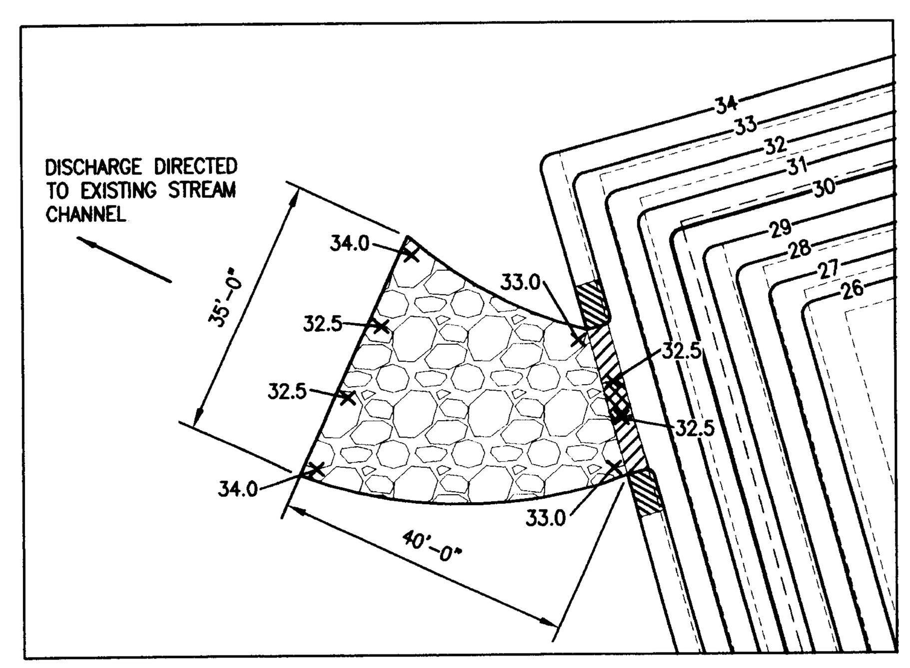

POND OUTLET DETAIL (17 / C-2)

SCALE: 1" = 20'

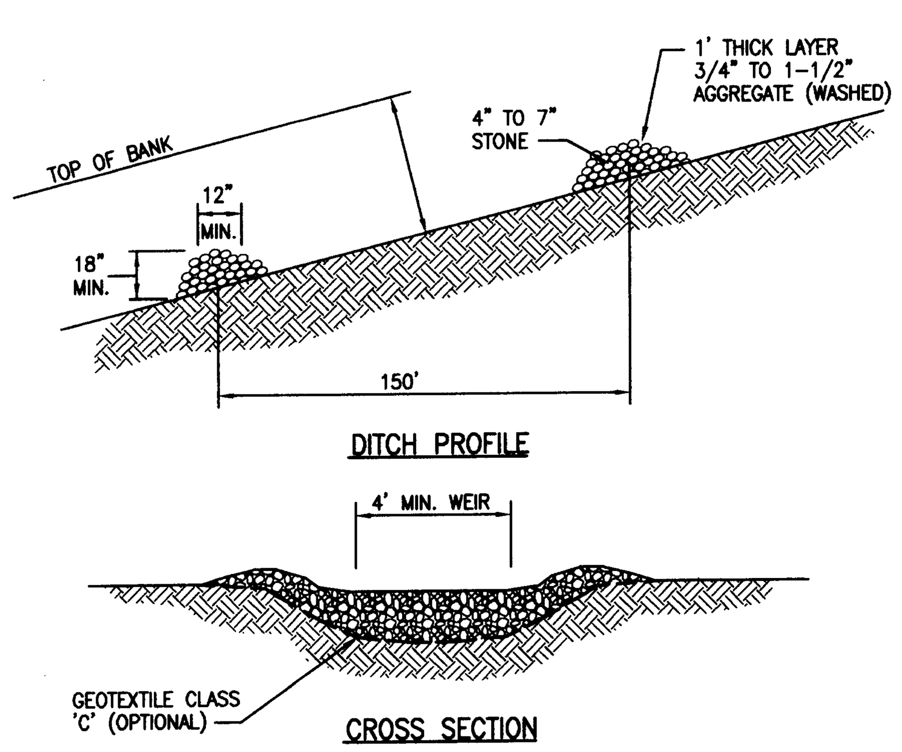

TEMPORARY STONE CHECK DAM DETAIL (16 / C-2)

NOT TO SCALE

NOTES:

1. SWALES AND DITCHES SHALL BE PREPARED IN ACCORDANCE WITH THE CONSTRUCTION SPECIFICATIONS DESCRIBED IN SECTION A-2: STANDARDS AND SPECIFICATIONS FOR TEMPORARY SWALE.
2. THE CHECK DAM SHALL BE CONSTRUCTED OF 4"-7" STONE. THE STONE SHALL BE PLACED SO THAT IT COMPLETELY COVERS THE WIDTH OF THE CHANNEL AND IS KEYED INTO THE CHANNEL BANKS.
3. THE TOP OF THE CHECK DAM SHALL BE CONSTRUCTED SO THE CENTER IS APPROXIMATELY 6" LOWER THAN THE OUTER EDGES, FORMING A WEIR THAT WATER CAN FLOW ACROSS.
4. THE MAXIMUM HEIGHT OF THE CHECK DAM AT THE CENTER SHALL NOT EXCEED 2'-0".
5. THE UPSTREAM SIDE OF THE CHECK DAM SHALL BE LINED WITH APPROXIMATELY 1'-0" OF 3/4" TO 1-1/2" AGGREGATE.
6. ACCUMULATED SEDIMENT SHALL BE REMOVED WHEN IT HAS BUILT UP TO 1/2 OF THE ORIGINAL HEIGHT OF THE WEIR CREST.
7. CHECK DAMS TO BE INSTALLED AFTER SUBGRADE IS ESTABLISHED AND ARE TO BE TEMPORARILY REMOVED IMMEDIATELY PRECEEDING LINER PLACEMENT. AFTER PROPOSED FINAL GRADE IS REACHED, CHECK DAMS SHALL BE REINSTALLED UNTIL FINAL STABILIZATION OF SWALES AND DITCHES.

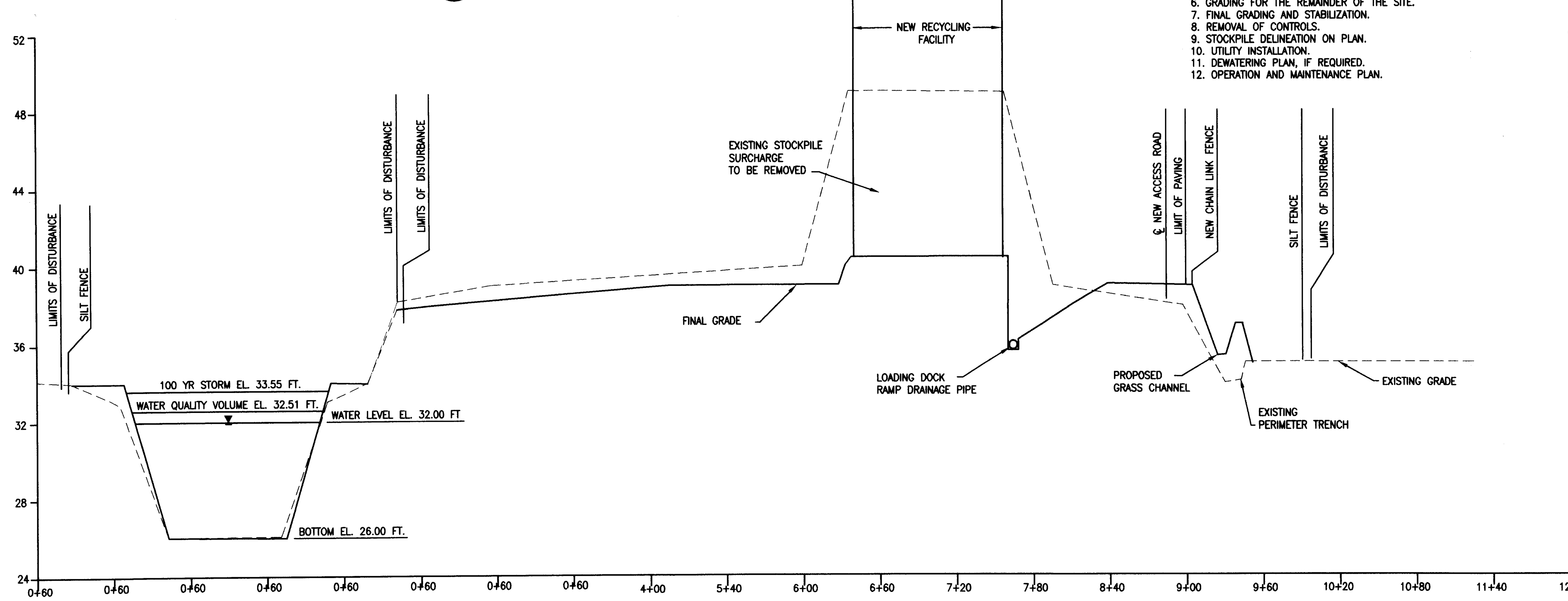

CROSS SECTION (B / C-2)

SCALE: HORIZ.: 1" = 60'
VERT.: 1" = 4'

4 2 0 4 8
VERTICAL GRAPHIC SCALE IN FEET

60 30 0 60 120
HORIZONTAL GRAPHIC SCALE IN FEET

STORMWATER MANAGEMENT NOTES

1. THE WATER QUALITY VOLUME (WQ), IS PROVIDED, FOR DRAINAGE AREA #1, BY AN ON-SITE STORMWATER MANAGEMENT POND WHICH IS LOCATED WEST OF THE PROPOSED PAVED AREA.

2. THE RECHARGE VOLUME (REV) FOR 5.76 ACRES OF THE BUILDING ROOFTOP AND PAVED AREA AND 4.31 ACRES OF PERVIOUS BUT DISTURBED AREAS ARE TREATED BY PROVIDING AN ON-SITE PERIMETER WET SWALE WHICH IS OUTLETTED INTO THE FOREBAY OF THE SWM POND.

3. THE CHANNEL PROTECTION VOLUME (CPV) OR ONE-YEAR POST DEVELOPMENT PEAK DISCHARGE IS NOT REQUIRED FOR SITES LOCATED ON THE EASTERN SHORE OF MARYLAND.

4. THE FLOOD PROTECTION VOLUME (QP10) IS PROVIDED BY A SWM POND WHICH IS LOCATED WEST OF THE PAVED AREA.

5. THE EXTREME FLOOD VOLUME (QF) IS NOT REQUIRED AS THERE IS NO EVIDENCE OF FLOODING DOWNSTREAM OF THE PROJECT, AND THE PROJECT IS NOT LOCATED IN A FLOODPLAIN.

6. WET WEATHER INSPECTION MUST BE CONDUCTED AFTER MAJOR STORMS DURING THE FIRST YEAR AFTER CONSTRUCTION THEN ANNUALLY THEREAFTER TO ENSURE THAT THE POND IS OPERATING AS DESIGNED AND INTENDED. INSPECTIONS SHALL EXAMINE FOR EVIDENCE OF CLOGGING, EXCESSIVE FLOW RATE, EROSION, CONDITION OF EMBANKMENT, CRACKING, LEAKAGE OR TREE GROWTH ON EMBANKMENT, SEDIMENTATION ADEQUACY OF INFLOWS AND OUTFLOWS, ETC. INSPECTIONS SHOULD BE PERFORMED WITH AS-BUILT PLANS IN HAND.

7. THE UPPER STAGES, BUFFER, SIDE SLOPES, EMBANKMENT, EMERGENCY SPILLWAY OF A POND MUST BE MOWED AT LEAST TWICE A YEAR TO PREVENT WOODY GROWTH AND CONTROL WEEDS.

8. DEBRIS AND LITTER REMOVAL SHALL BE ENSURED DURING REGULAR MOWING OPERATIONS.

9. ANY SLUMPING OR EROSION OF POND SIDE SLOPES, EMERGENCY SPILLWAY AND EMBANKMENT WILL REQUIRE IMMEDIATE REPAIR. ADDITIONAL REGRADING, REVEGETATION AND REPAIR OR REPLACEMENT OF RIP RAP APRONS MAY BE REQUIRED AS NECESSARY TO ADDRESS THE EROSION PROBLEM.

10. SEDIMENT REMOVAL MUST BE PERFORMED WHEN 50% OF THE TOTAL FOREBAY CAPACITY HAS BEEN DIMINISHED. SEDIMENT REMOVAL FROM PONDS NOT MANAGING RUNOFF FROM DESIGNATED HOTSPOTS CAN SAFELY DISPOSED AS LAND APPLICATION OR LAND FILLING. SEDIMENT REMOVAL FROM PONDS MANAGING RUNOFF FROM DESIGNATED HOTSPOTS MAY BE CONSIDERED TOXIC OR HAZARDOUS MATERIAL AND WILL REQUIRE SEDIMENT TESTING PRIOR TO SEDIMENT DISPOSAL.

11. CLEAR VEHICULAR ACCESS MUST BE MAINTAINED TO CONTROL STRUCTURES FOR REGULAR MAINTENANCE RESPONSIBILITIES AND OPERATIONS.

12. ALL OPEN CHANNEL SYSTEMS SHALL BE INSPECTED PERIODICALLY DURING THE FIRST FEW MONTHS UNTIL ADEQUATELY ESTABLISHED THEN ANNUALLY THEREAFTER. INSPECTIONS SHOULD EXAMINE FOR EVIDENCE OF DAMAGE BY VEHICULAR OF FOOT TRAFFIC, ENCROACHMENT, EROSION, DENSITY OF VEGETATION, CONCENTRATED FLOWS.

13. VIGOROUS AND DENSE GROWTH SHOULD BE MAINTAINED. ANY BARE SPOTS, BURNED OUT AREAS, OR ERODED AREAS MUST BE RE-SEEDED OR RE-SODDED IMMEDIATELY. WATERING AND/OR FERTILIZATION SHOULD BE PROVIDED DURING THE FIRST FEW MONTHS AFTER STRIP IS ESTABLISHED AND MAY PERIODICALLY BE NEEDED DURING PERIOD OF DROUGHT.

14. MOWING OF OPEN CHANNEL SYSTEMS AND GRASS FILTER STRIPS MUST BE PERFORMED AS REQUIRED DURING THE GROWING SEASON TO MAINTAIN GRASS HEIGHTS AT 4-6 INCHES.

15. WET SWALES WITH WETLAND VEGETATION MAY NOT REQUIRE FREQUENT MOWING.

16. SEDIMENT BUILD-UP WITHIN THE BOTTOM OF THE CHANNEL OR FILTER STRIP MUST BE REMOVED WHEN 25% OF THE ORIGINAL WATER QUALITY VOLUME HAS BEEN EXCEEDED.

17. APPROVAL OF THE INSPECTION AGENCY SHALL BE REQUESTED UPON COMPLETION OF INSTALLATION OF PERIMETER CONTROLS BUT BEFORE PROCEEDING WITH ANY OTHER EARTH DISTURBANCE OR GRADING. OTHER BUILDING OR GRADING INSPECTION APPROVALS MAY NOT BE AUTHORIZED UNTIL THIS INITIAL APPROVAL BY THE INSPECTION AGENCY IS MADE.

18. CONVERSION CAN ONLY TAKE PLACE AFTER ALL DISTURBED AREAS HAVE BEEN PERMANENTLY STABILIZED TO THE SATISFACTION OF THE INSPECTION AUTHORITY AND STORM DRAINS HAVE BEEN FLUSHED.

19. CERTIFICATION BY OWNER OF DEVELOPER THAT: 1. ANY CLEARING, GRUBBING, CONSTRUCTION OR DEVELOPMENT, OR ALL OF THESE, WILL BE DONE PURSUANT TO THIS PLAN; 2. RESPONSIBLE PERSONNEL INVOLVED IN THE CONSTRUCTION PROJECT WILL HAVE CERTIFICATION OF TRAINING AT THE DEPARTMENT-APPROVED TRAINING PROGRAM GREEN-CARD CERTIFICATION FOR THE CONTROL OF SEDIMENT AND EROSION BEFORE BEGINNING THE PROJECT; AND 3. THE DEVELOPER SHALL REQUEST THAT THE INSPECTION AGENCY APPROVE WORK COMPLETED AT THE VARIOUS STAGES OF CONSTRUCTION.

STORMWATER MANAGEMENT SEQUENCE OF CONSTRUCTION

1. CONTACT DEPT. OF REVIEW AND PLANNING – SCOTT PENNER @ 410-632-1200, EXT. 1140.
2. CLEARING/GRUBBING TO INSTALL CONTROLS.
3. CONSTRUCTION OF PERIMETER CONTROLS.
4. REMAINING CLEARING AND GRUBBING.
5. ROAD GRADING.
6. GRADING FOR THE REMAINDER OF THE SITE.
7. FINAL GRADING AND STABILIZATION.
8. REMOVAL OF CONTROLS.
9. STOCKPILE DELINEATION ON PLAN.
10. UTILITY INSTALLATION.
11. DEWATERING PLAN, IF REQUIRED.
12. OPERATION AND MAINTENANCE PLAN.

REVISIONS			
NO.	DATE	BY	DESCRIPTION

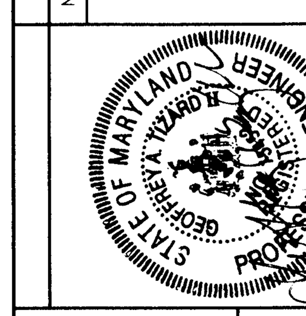

CENTRAL LANDFILL FACILITY SITE
MUNICIPAL SOLID WASTE RECOVERY FACILITY
WORCESTER COUNTY, MARYLAND

STORMWATER MANAGEMENT DETAILS AND MISCELLANEOUS NOTES

EA ENGINEERING, SCIENCE, AND TECHNOLOGY
Loveton Center
15 Loveton Circle
Sparks, Maryland 21152
(410) 771-4950

DATE	MAY 2002
DESIGNED BY	DOK
DRAWN BY	DOK
CHECKED BY	GAT
PROJECT MANAGER	GAT
PROJECT NUMBER	10609.14
SCALE	AS SHOWN
FILE NAME	C-5
DRAWING NUMBER	C-5
SHEET NUMBER	6 OF 31

FILE: (LOVETON) Q:\PROJECTS\1060914\CONTRACTDOCUMENTS\C-5.DWG 6-3-02