PANEL L (SEC. 1)												
3 =PHASE			208Y/120 =VOLT						300A MCB =TYPE			
4 =WIRE			300 AMP =AMP						10,000 =MIN AIC			
CKT	FOR	CKT BKR			LOAD			CKT	FOR	CKT BKR		
		P	AMP	VOLT	KVA	Ø	KVA			P	AMP	VOLT
1	RECEPTACLES	1	20	120	0.8	a	0.7	2	HEAT TRACING SYSTEM	1	20	120
3	RECEPTACLES	1	20	120	0.8	b	0.7	4	HEAT TRACING SYSTEM	1	20	120
5	RECEPTACLES	1	20	120	0.8	c	0.7	6	HEAT TRACING SYSTEM	1	20	120
7	RECEPTACLES	1	20	120	0.6	a	0.7	8	HEAT TRACING SYSTEM	1	20	120
9	VENDING MECH.	1	20	120	1.2	b		10	SPARE	1	20	120
11	VENDING MECH.	1	20	120	1.2	c		12	SPARE	1	20	120
13	MAINTENANCE RECEPT.	1	20	120	0.6	a		14	SPARE	1	20	120
15	MAINTENANCE RECEPT.	1	20	120	0.2	b	0.5	16	CUTTER PUMPS-CONTROL	1	20	120
17	BREAK RM. RECEPT.	1	20	120	0.6	c	0.5	18	DOM. B.P.-CONTROL	1	20	120
19	OFFICE RECEPT.	1	20	120	0.2	a	1.0	20	FACP	1	20	120
21	WELDING RECEPT.	2	30	208	1.0	b	0.6	22	RECEPTACLES	1	20	120
23	-	-	-	-	1.0	c	0.8	24	RECEPTACLES	1	20	120
25	RECEPTACLE	1	20	120	0.4	a	0.2	26	TELEPHONE BB RECEPTACLE	1	20	120
27	RECEPTACLE	1	20	120	0.2	b	0.2	28	MOTOR OPERATED DAMPER	1	20	120
29	WOMEN'S BATH RECEPT.	1	20	120	0.2	c	0.2	30	MOTOR OPERATED DAMPER	1	20	120
31	SPRINKLER RM. RECEPT.	1	20	120	0.4	a	0.2	32	MOTOR OPERATED DAMPER	1	20	120
33	SPARE	1	20	120		b	0.2	34	MOTOR OPERATED DAMPER	1	20	120
35	ELECTRIC RM. RECEPT.	1	20	120	0.2	c	0.2	36	MOTOR OPERATED DAMPER	1	20	120
37	BREAK RM. RECEPT.	1	20	120	0.2	a		38	SPARE	1	20	120
39	MEN'S BATH RECEPT.	1	20	120	0.2	b		40	SPARE	1	20	120
41	REFRIGIRATOR	1	20	120	0.2	c		42	SPARE	1	20	120

a 6.0 =TOTAL PHASE LOAD
b 5.8 =TOTAL PHASE LOAD
c 6.6 =TOTAL PHASE LOAD
18.4 =TOTAL PANEL CONNECTED LOAD

PANEL L (SEC. 2)												
3 =PHASE			208Y/120 =VOLT						300A MCB =TYPE			
4 =WIRE			300 AMP =AMP						10,000 =MIN AIC			
CKT	FOR	CKT BKR			LOAD			CKT	FOR	CKT BKR		
		P	AMP	VOLT	KVA	Ø	KVA			P	AMP	VOLT
43	EF-1 (ON THE ROOF)	3	35	208	2.1	a	4.0	44	HP-1 (INDOOR)	2	50	208
45	-	-	-	-	2.1	b	4.0	46	-	-	-	-
47	-	-	-	-	2.1	c	1.2	48	HP-1 (OUTDOOR)	2	20	208
49	EF-2 (ON THE ROOF)	3	35	208	2.1	a	1.2	50	-	-	-	-
51	-	-	-	-	2.1	b	0.1	52	EF-5	1	20	120
53	-	-	-	-	2.1	c	0.8	54	EF-6	1	20	120
55	EF-3 (ON THE ROOF)	3	35	208	2.1	a	0.8	56	EF-7	1	20	120
57	-	-	-	-	2.1	b	1.1	58	UH-1	2	20	208
59	-	-	-	-	2.1	c	1.1	60	-	-	-	-
61	EF-4 (ON THE ROOF)	3	35	208	2.1	a	1.1	62	UH-2	2	20	208
63	-	-	-	-	2.1	b	1.1	64	-	-	-	-
65	-	-	-	-	2.1	c		66	SPARE	1	20	120
67	AIR COMPRESSOR	3	15	208	0.5	a		68	SPARE	1	20	120
69	-	-	-	-	0.5	b	1.1	70	UH-3	2	20	208
71	-	-	-	-	0.5	c	1.1	72	-	-	-	-
73	FORK LIFT	2	30	208	1.0	a	0.8	74	WH-2	2	20	208
75	-	-	-	-	1.0	b	0.8	76	-	-	-	-
77	FORK LIFT	2	30	208	1.0	c	0.8	78	WH-1	2	20	208
79	-	-	-	-	1.0	a	0.8	80	-	-	-	-
81	SPARE	1	20	120		b		82	SPARE	1	20	120
83	SPARE	1	20	120		c		84	SPARE	1	20	120

a 19.4 =TOTAL PHASE LOAD
b 18.1 =TOTAL PHASE LOAD
c 14.8 =TOTAL PHASE LOAD
52.3 =TOTAL PANEL CONNECTED LOAD

PANEL H												
3 =PHASE			480Y/277 =VOLT						300A MCB =TYPE			
4 =WIRE			300 =AMP						14,000 =MIN AIC			
CKT	FOR	CKT BKR			LOAD			CKT	FOR	CKT BKR		
		P	AMP	VOLT	KVA	Ø	KVA			P	AMP	VOLT
1	ROLL UP DOOR MOTOR	1	20	277	2.5	a	3.2	2	GENERAL LIGHTING	1	20	277
3	ROLL UP DOOR MOTOR	1	20	277	2.5	b	4.0	4	GENERAL LIGHTING	1	20	277
5	ROLL UP DOOR MOTOR	1	20	277	2.5	c	4.0	6	GENERAL LIGHTING	1	20	277
7	ROLL UP DOOR MOTOR	1	20	277	2.5	a	3.2	8	GENERAL LIGHTING	1	20	277
9	ROLL UP DOOR MOTOR	1	20	277	2.5	b	2.7	10	LIGHTING	1	20	277
11	ROLL UP DOOR MOTOR	1	20	277	2.0	c	0.6	12	LIGHTING	1	20	277
13	ROLL UP DOOR MOTOR	1	20	277	2.0	a	2.8	14	GENERAL LIGHTING	1	20	277
15	CUTTER PUMPS	3	15	480	1.0	b	0.8	16	LIGHTING	1	20	277
17	-	-	-	-	1.0	c	20.0	18	WATER HEATER	3	100	480
19	-	-	-	-	1.0	a	20.0	20	-	-	-	-
21	BOOSTER PANEL	3	15	480	2.0	b	20.0	22	-	-	-	-
23	-	-	-	-	2.0	c	25.0	24	TRANSFORMER	3	125	480
25	-	-	-	-	2.0	a	25.0	26	-	-	-	-
27	OUTDOOR LIGHTS	1	20	277	2.0	b	25.0	28	-	-	-	-
29	OUTDOOR LIGHTS	1	20	277	2.0	c	3.0	30	RH-4	1	20	277
31	RH-1	1	20	277	3.0	a	3.0	32	RH-5	1	20	277
33	RH-2	1	20	277	3.0	b	3.0	34	RH-6	1	20	277
35	RH-3	1	20	277	3.0	c	3.0	36	RH-7	1	20	277
37	SPARE	1	20	277		a		38	SPARE	1	20	277
39	SPARE	1	20	277		b		40	SPARE	1	20	277
41	SPARE	1	20	277		c		42	SPARE	1	20	277

a 70.2 =TOTAL PHASE LOAD
b 68.5 =TOTAL PHASE LOAD
c 68.1 =TOTAL PHASE LOAD
206.8 =TOTAL PANEL CONNECTED LOAD

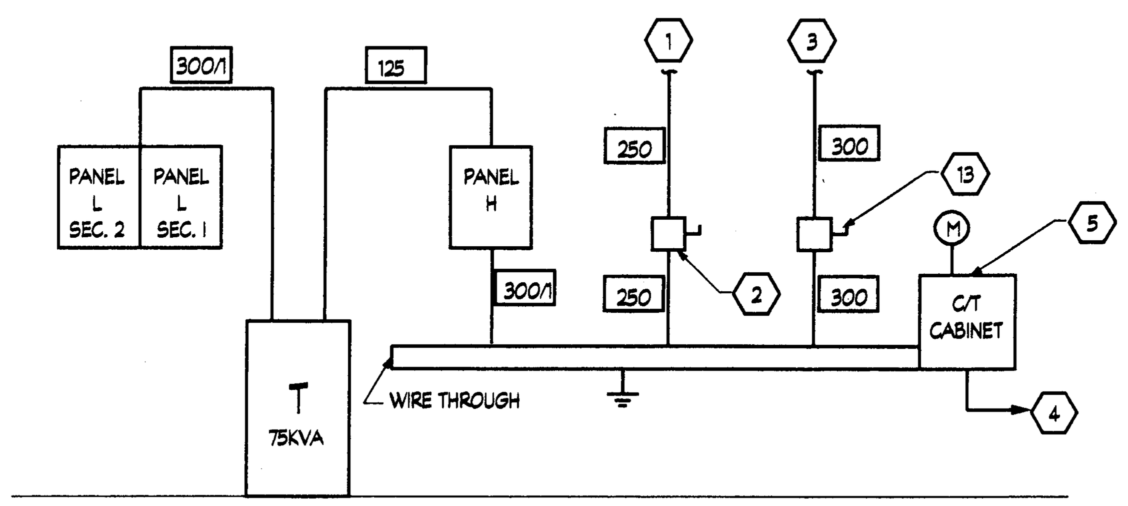

POWER RISER DIAGRAM
NO SCALE

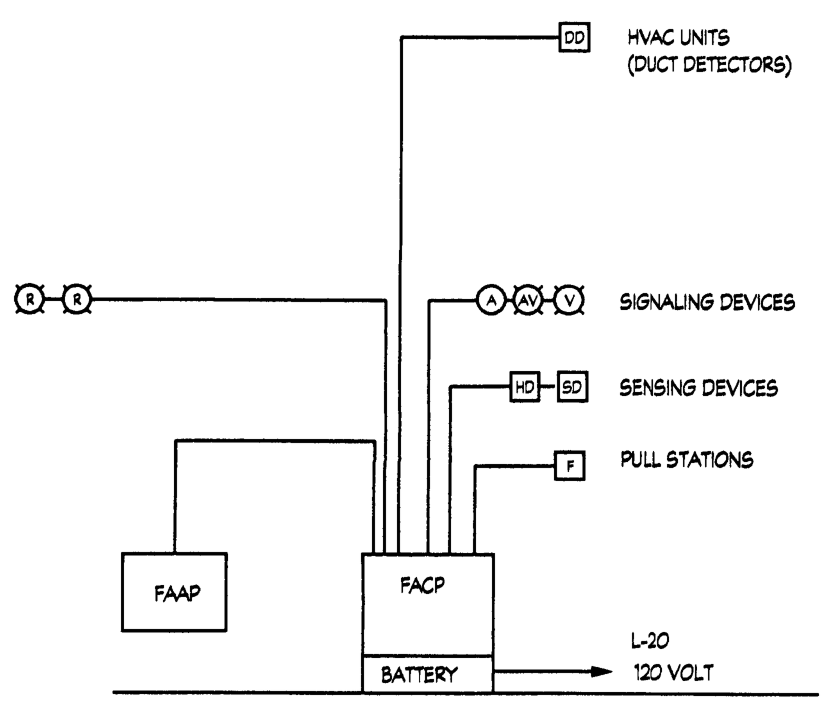

FIRE ALARM RISER
NO SCALE

NOTES:

1. SEE ELECTRICAL, MECHANICAL AND PLUMBING.FLOOR PLANS FOR DEVICE QUANTITIES & LOCATIONS.

FEEDER SCHEDULE					
NO.	FEEDER SIZE	WIRE SIZE	CONDUIT		REMARKS
			SIZE	TYPE	
1	125	3#1 + 1#6G	1-1/2"	EMT	
2	250	4#250MCM + 1#4G	2-1/2"	EMT	
3	300	3#300MCM + 1#4G	4"	PVC	USE IGSC INSIDE THE BUILDING
4	300/1	4#300MCM + 1#4G	2-1/2"	IGSC	
EMT = ELECTRICAL METALIC TUBE IGSC = INTERMEDIATE GALUANIZED STEEL CONDUIT					

DRAWING NOTES ⬡

1. TO CONVEY EQUIPMENT CONTROL PANEL.

2. 480V, 400A, 3P,+ SG DISC. SWITCH FUSED AT 255A .

3. 3#300MCM+1#1G, 4"C TO FIRE PUMP AND JOCKEY PUMP CONTROL PANEL. SEE DWG C-2 FOR FIRE PUMP & CONTROL PANEL LOCATION.

4. 2 SETS (4#500MCM-4"C) + 2 - 4'C SPARE TO LOCAL POWER CO. TRANSFORMER. SEE DWG C-2 FOR TRANSFORMER LOCATION.

5. INCOMING POWER C/T CABINET & C/T.

6. 400A, 3P, 480V FUSED DISC. SW. FUSED AT 225A FOR CONVEYOR EQUIPMENT CONTROL PANEL. SEE POWER RISER DIAGRAM AND NOTES NUMBER 1 AND 2 ABOVE.

7. PANEL H, 300A, 480/277V, 3PH,4W

8. TRANSFORMER, 75KVA, 480V-208/120V

9. PANEL L, 300A, 208/120V, 3PH,4W

10. MOTOR OPERATED DAMPER INTERLOCKED WITH HP-1. COORDINATE ALL REQUIREMENTS WITH THE MECHANICAL CONTRACTOR.

11. FACP

12. MOTOR OPERATED DAMPER INTERLOCKED WITH EF-7. COORDINATE ALL REQUIREMENTS WITH THE MECHANICAL CONTRACTOR.

13 480V, 600A,3P + SG DISC, SW. FUSED AT 600 A FOR FIRE PUMP.

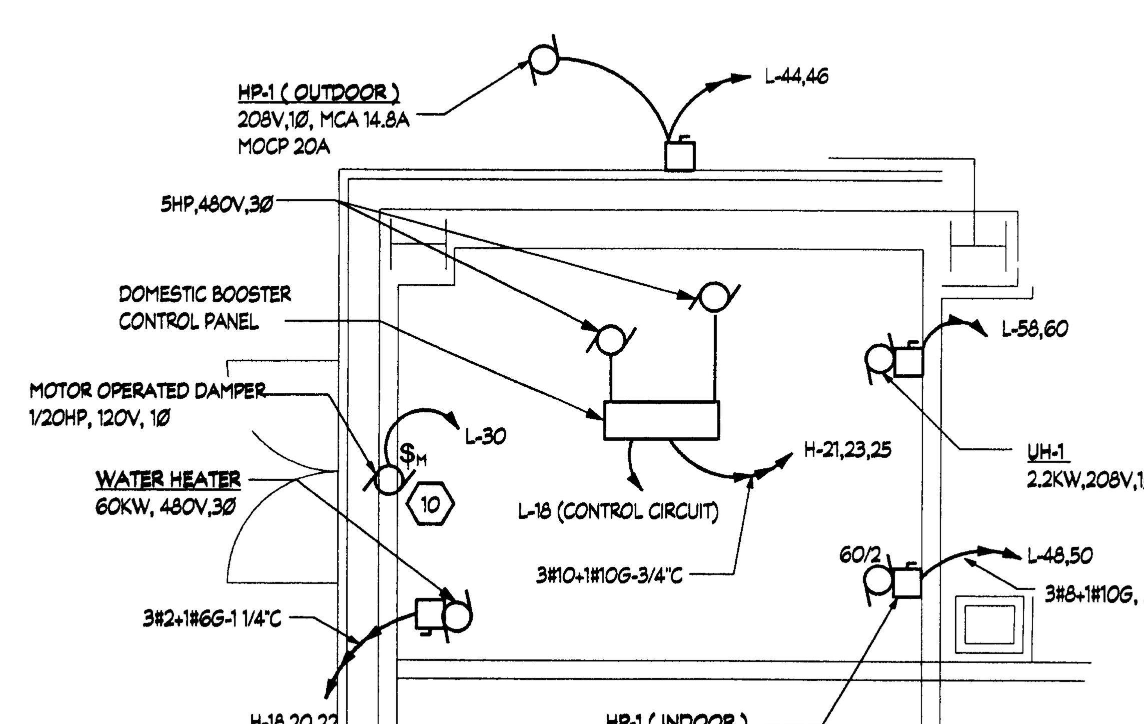

MECHANICAL ROOM PART-PLAN
SCALE: 1/4" = 1' - 0"

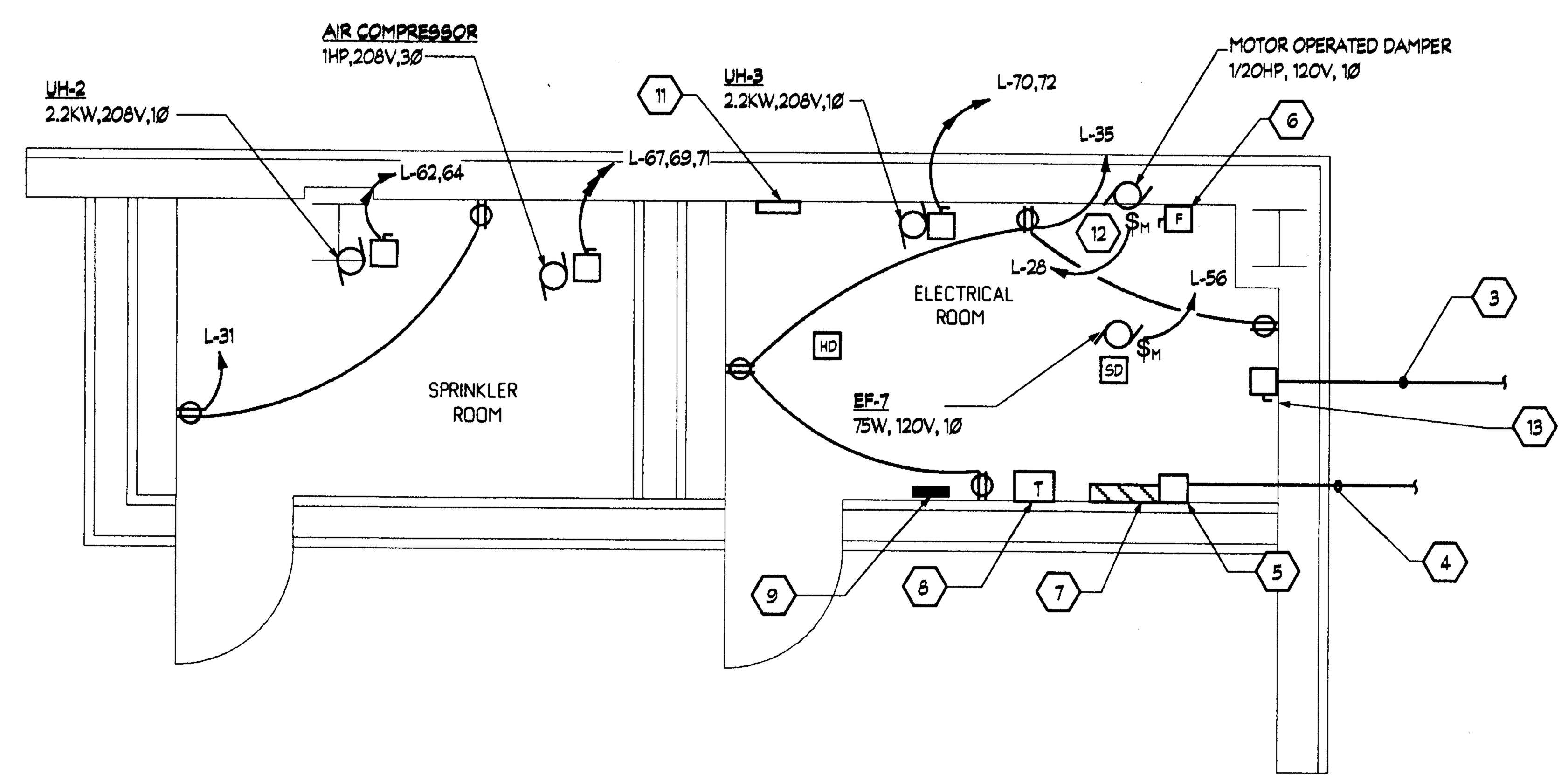

ELECTRICAL & SPRINKLER ROOM PART-PLAN
SCALE: 1/4" = 1' - 0"

REVISIONS

NO.	DATE	BY	DESCRIPTION

SEAL

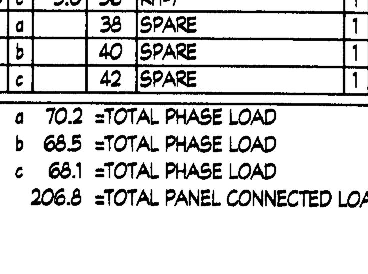

CENTRAL LANDFILL FACILITY SITE
MUNICIPAL SOLID WASTE RECOVERY FACILITY
WORCESTER COUNTY, MARYLAND

POWER RISER & SCHEDULE

EA ENGINEERING, SCIENCE, AND TECHNOLOGY
Loveton Center
15 Loveton Circle
Sparks, Maryland 21152
(410) 771-4950

Allen & Shariff
CORPORATION
7061 Deepage Dr
Columbia, Md 21045
410-381-7100 Fax: 410-381-7110
1-800-ASC-4-MEP
(1-800-272-4637)

FILE: (LOVETON) Q:\PROJECTS\10609\14\CONTRACTDRAWINGS\A-1.DWG 02-26-02

DATE	MAY 2002
DESIGNED BY	IG
DRAWN BY	NLM
CHECKED BY	IG
PROJECT MANAGER	GAT
PROJECT NUMBER	10609.14
SCALE	NONE
FILE NAME	RISER & SCHEDULE
DRAWING NUMBER	E-4
SHEET NUMBER	24 OF 31

ASC PROJECT #01068