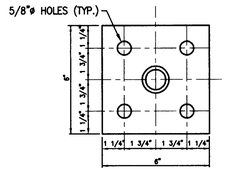

NOTE: FOR 6" WALLS USE ⊾ 4" x 4" x 3/8"

BASE PLATE PLAN DETAIL (10 / A-9)

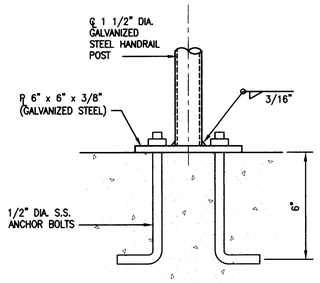

BASE PLATE SECTION DETAIL (11 / A-9)

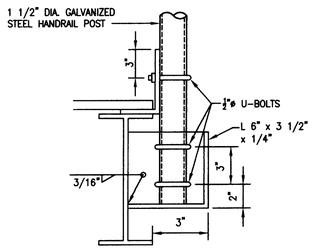

HANDRAIL POST DETAIL (12 / A-9)

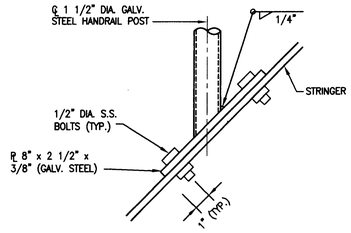

HANDRAIL POST DETAIL (13 / A-9)

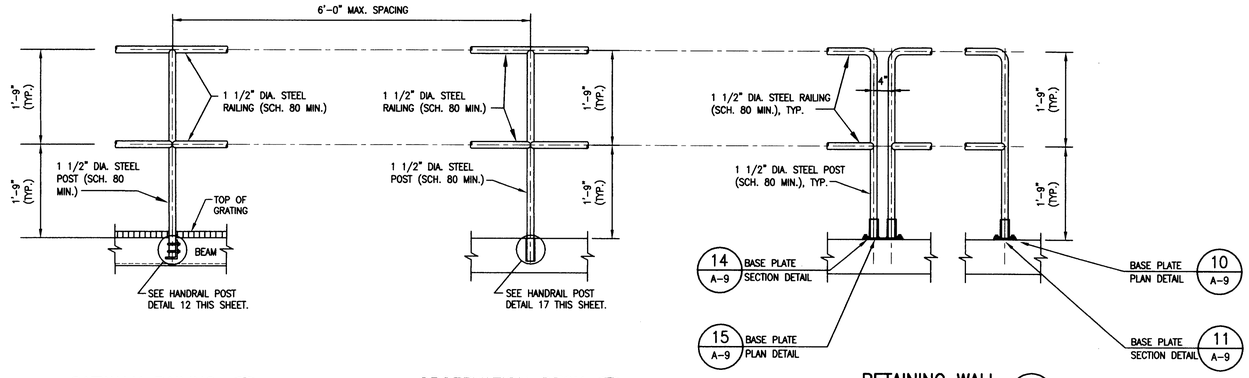

CATWALK RAILING DETAIL (17 / A-5)

OBSERVATION DECK RAILING DETAIL (18 / A-5)

RETAINING WALL RAILING DETAIL (19 / S-4)

NOTE:
ALL RAILING CONNECTIONS SHALL BE COPED WELDED AND GROUND SMOOTH OR NON-WELDED CONNECTIONS (@ CONTRACTORS OPTION)

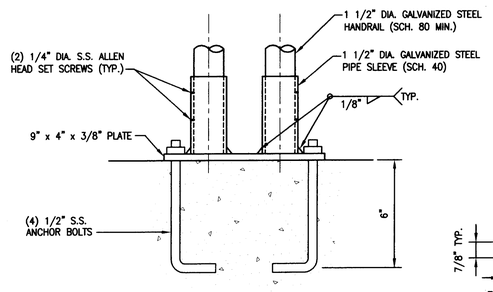

BASE PLATE SECTION DETAIL (14 / A-9)

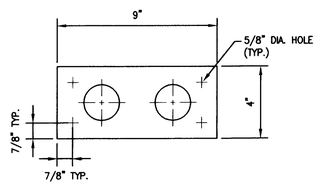

BASE PLATE PLAN DETAIL (15 / A-9)

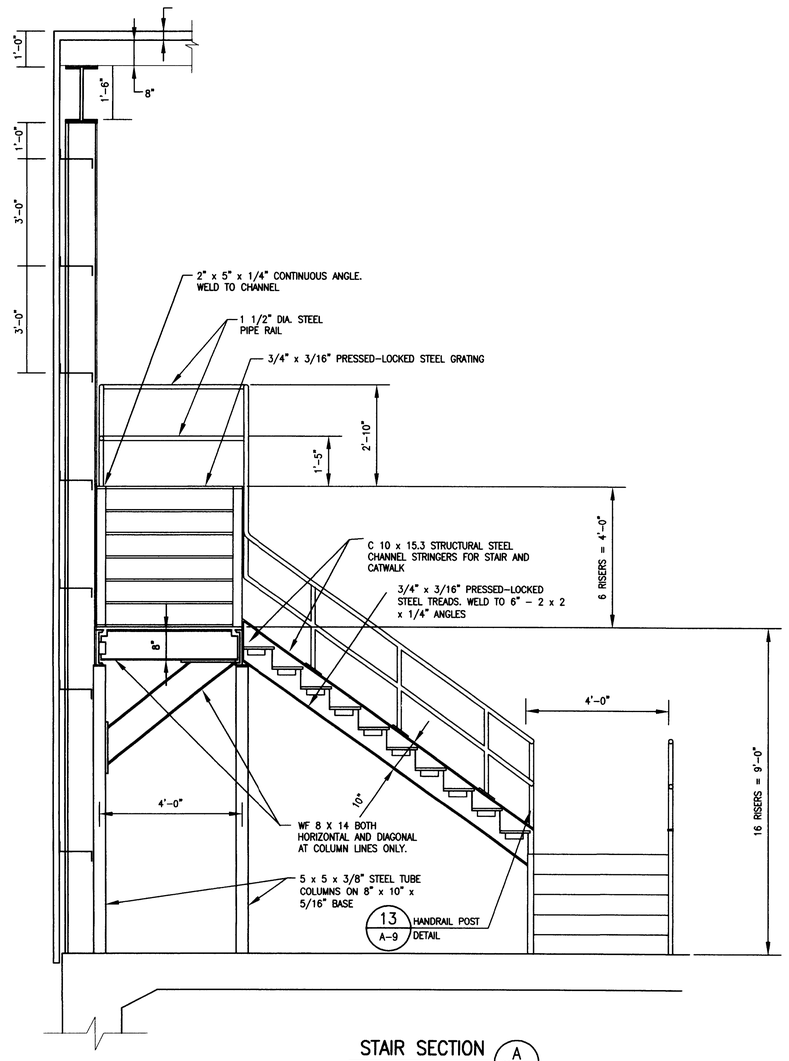

STAIR SECTION (A / A-1, A-5)

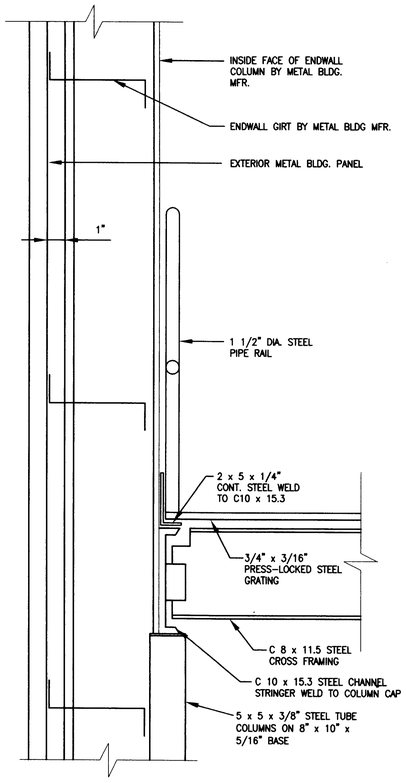

CATWALK SECTION (B / A-1, A-5)

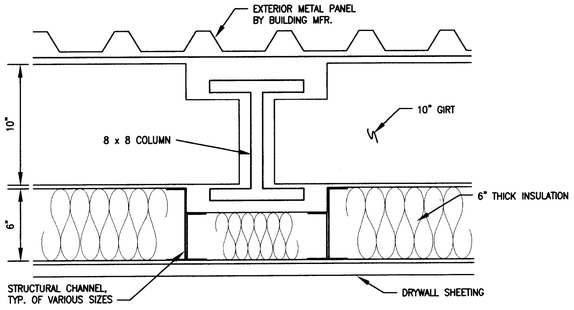

BUILDING WALL DETAIL (16 / A-5)

REVISIONS			
NO.	DATE	BY	DESCRIPTION

SEAL

CENTRAL LANDFILL FACILITY SITE
MUNICIPAL SOLID WASTE RECOVERY FACILITY
WORCESTER COUNTY, MARYLAND

STAIR AND RAILING DETAILS

EA ENGINEERING, SCIENCE, AND TECHNOLOGY
Loveton Center
15 Loveton Circle
Sparks, Maryland 21152
(410) 771-4950

DATE	MAY 2002
DESIGNED BY	DOK
DRAWN BY	FDV
CHECKED BY	GAT
PROJECT MANAGER	GAT
PROJECT NUMBER	10609.14
SCALE	AS SHOWN
FILE NAME	A-9
DRAWING NUMBER	A-9
SHEET NUMBER	16 OF 31

FILE: [LOKETON] Q:\PROJECTS\10609\14\CONTRACTDOCUMENTS\A-9.DWG 6-3-02