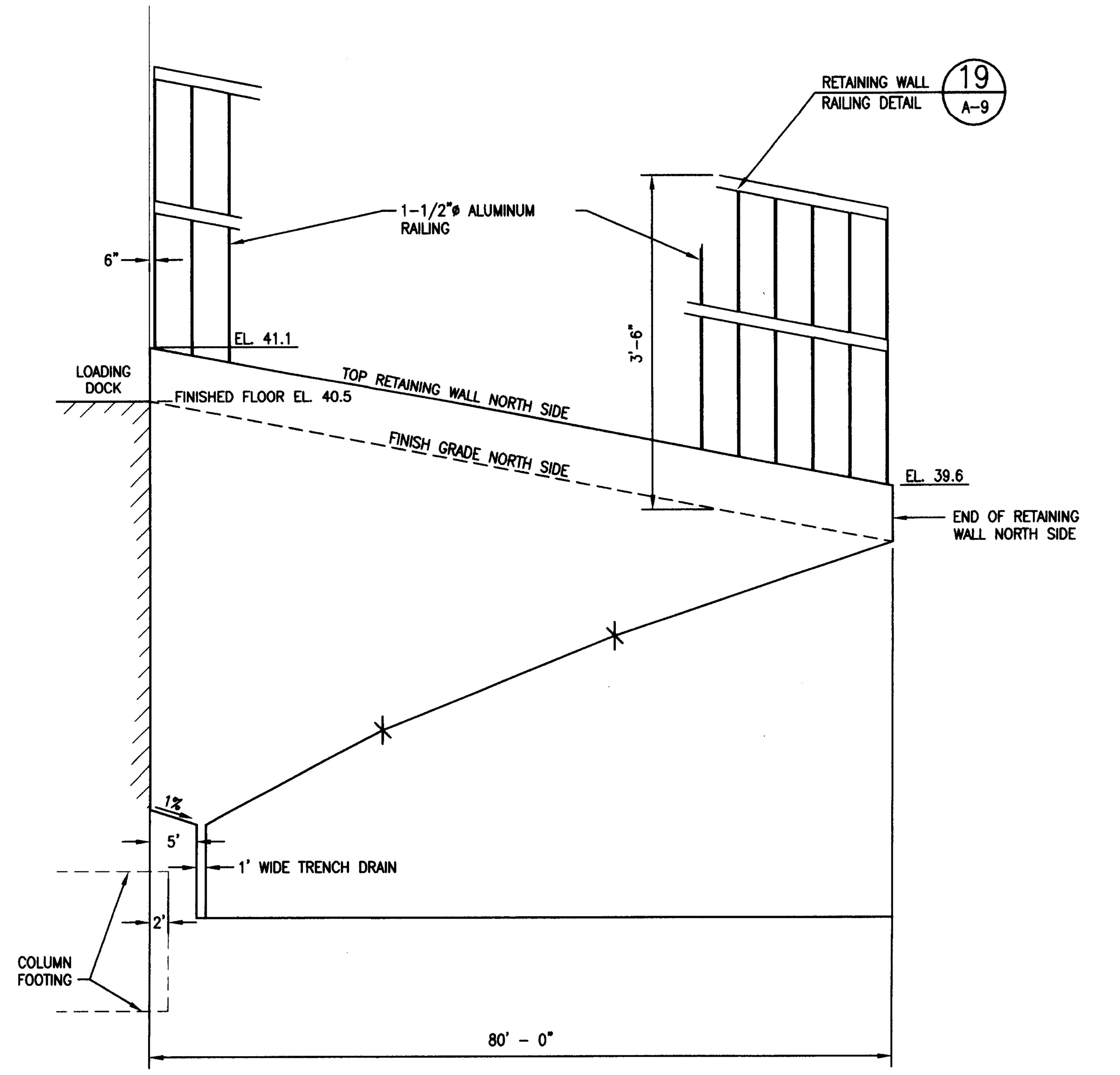


SECTION A S-4

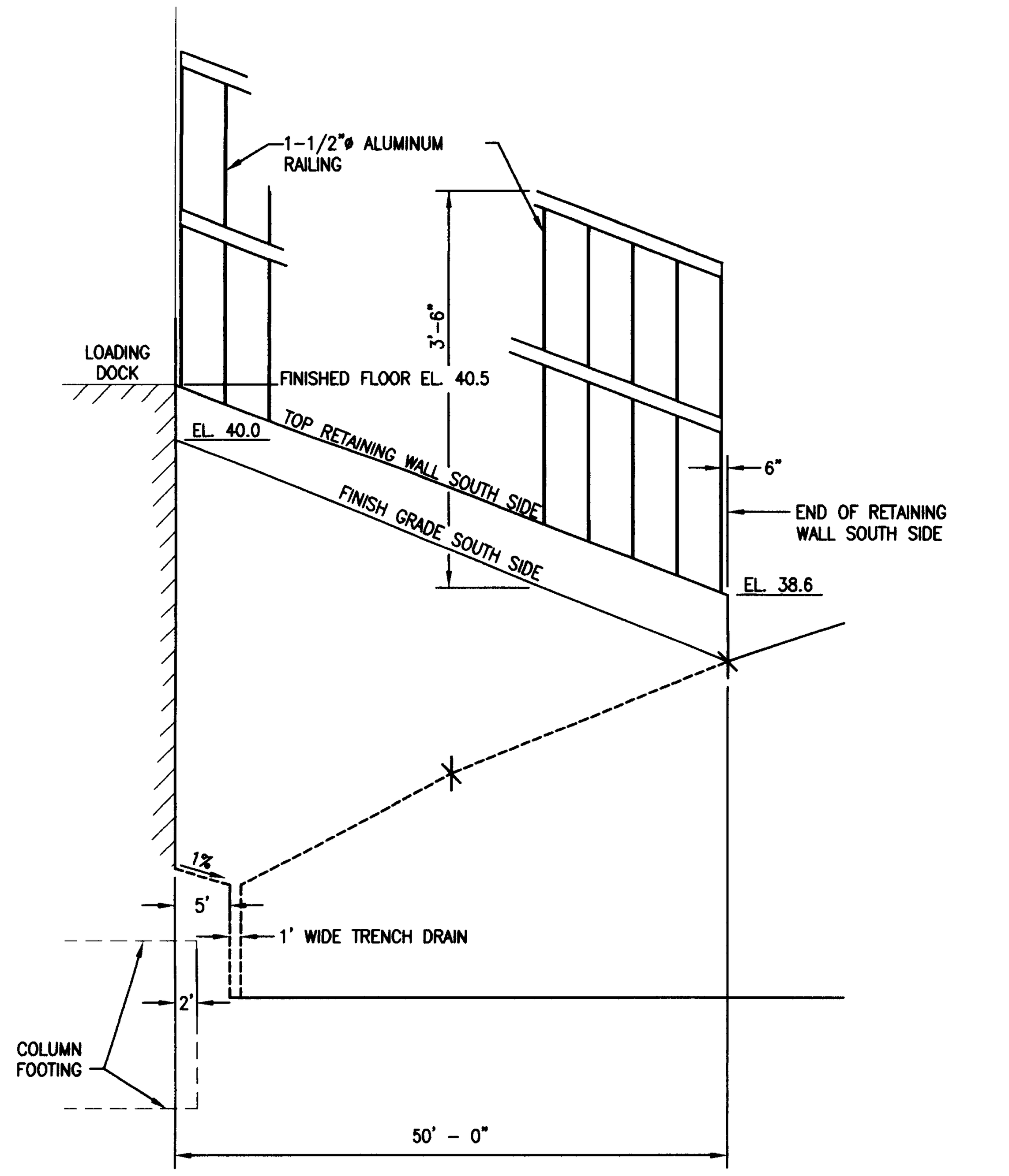


SECTION B S-4

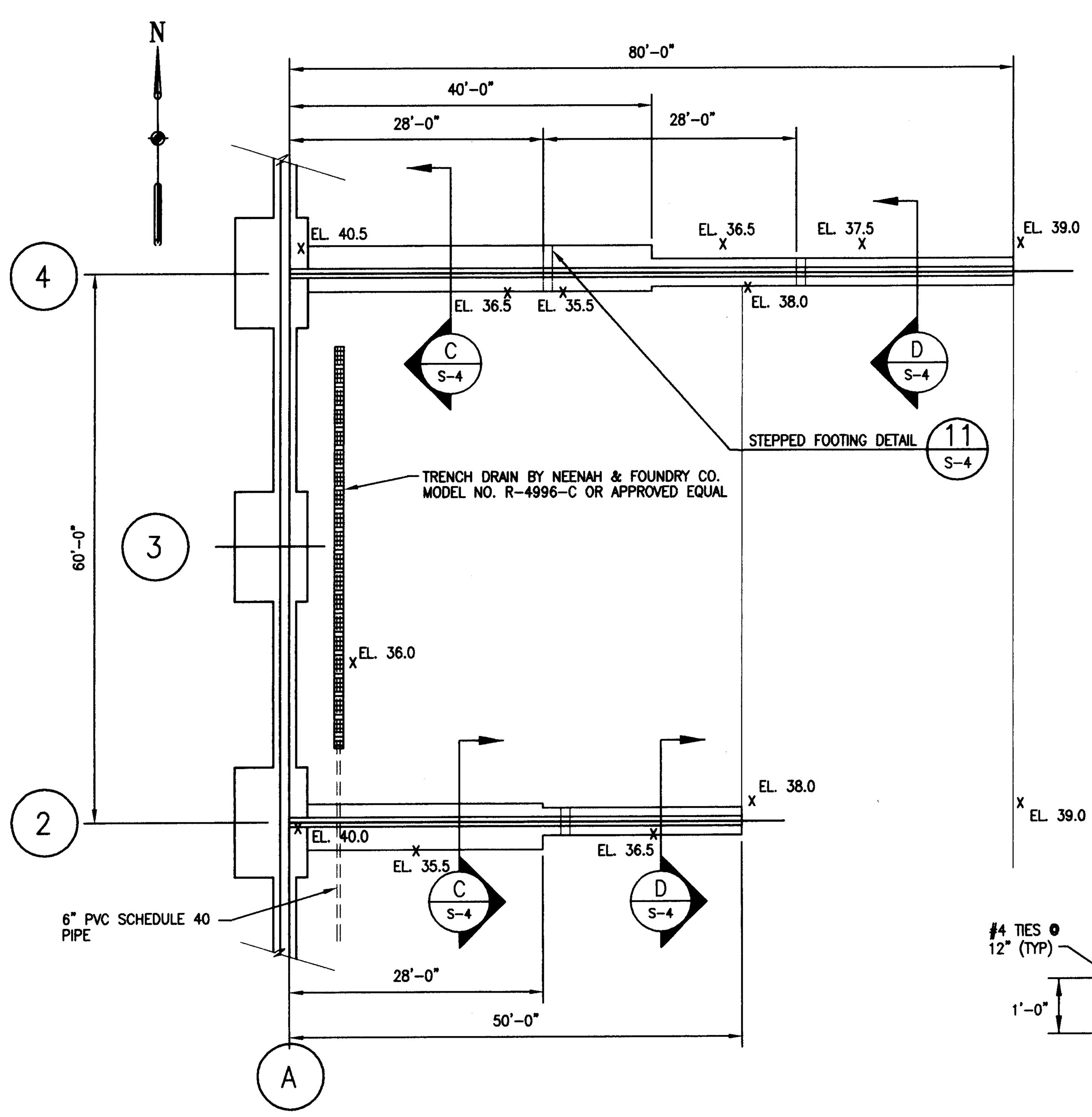


RETAINING WALL AT LOADING DOCK 10 S-4

SCALE: 1/2"=1'-0"

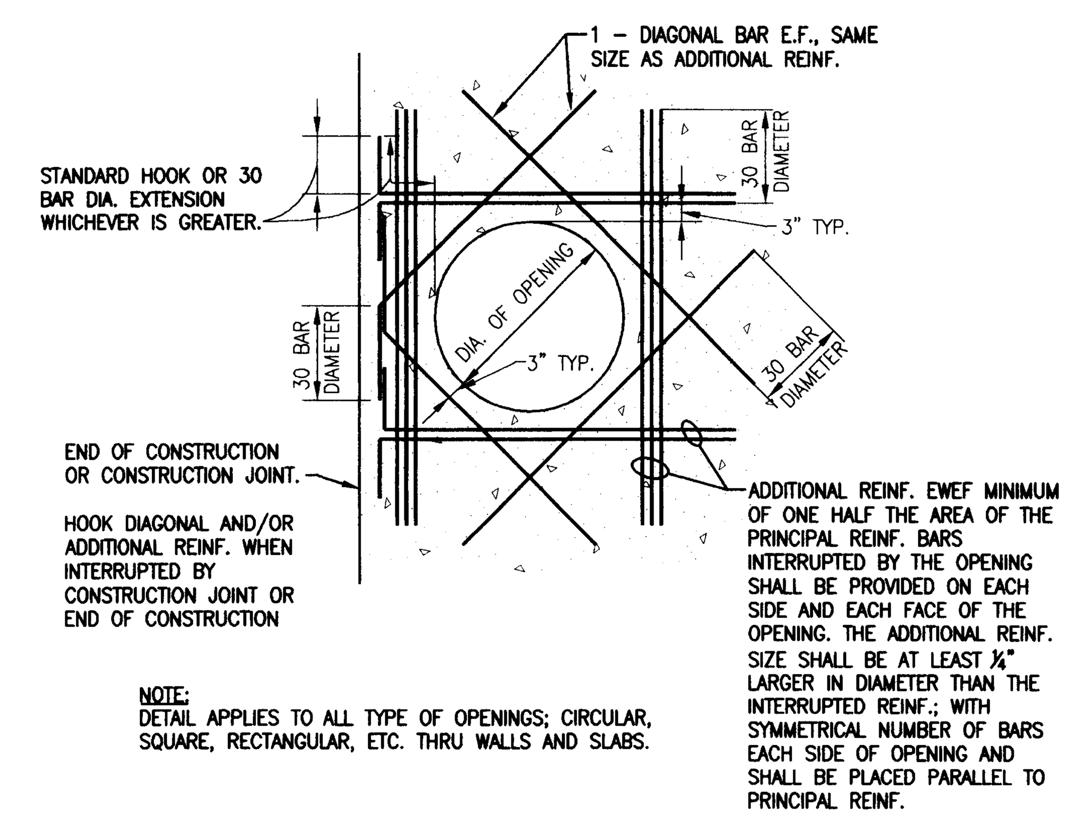


ADDITIONAL REINFORCING AROUND OPENING IN WALLS AND SLABS

NOT TO SCALE

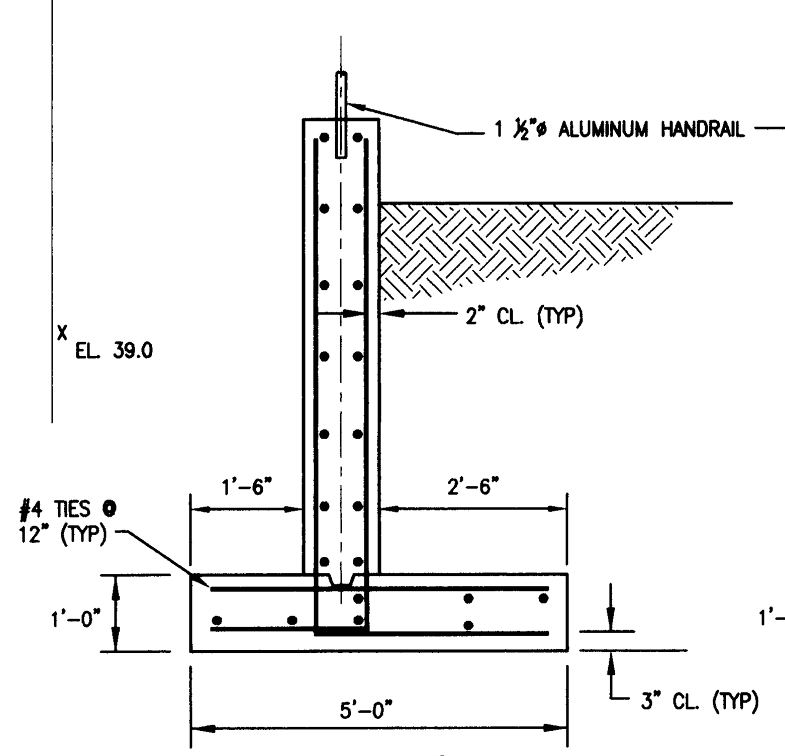


SECTION C S-4

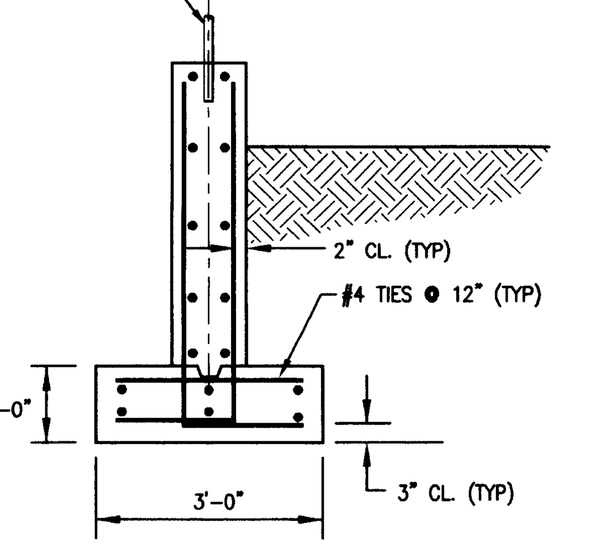


SECTION D S-4

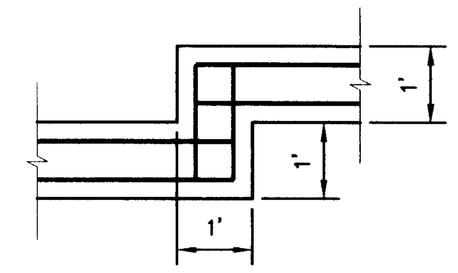


STEPPED FOOTING DETAIL 11 S-4

## GENERAL STRUCTURAL NOTES & OUTLINE SPECIFICATIONS

1. CODES:
THE FOUNDATION WAS DESIGNED FOR THE LIVE LOADS AS REQUIRED BY CONSTRUCTION IN ACCORDANCE WITH THE INTERNATIONAL BUILDING CODE 2000 EDITION. ANY INCREASE IN THESE LOADINGS, DUE TO CHANGE IN FUNCTION, CONSTRUCTION MATERIALS, ETC. SHALL HAVE WRITTEN APPROVAL FROM THE STRUCTURAL ENGINEER.

2. DIMENSIONS:
IT SHALL BE THE CONTRACTOR'S REPONSIBILITY TO COORDINATE THE STRUCTURAL DRAWINGS AND THEIR DIMENSIONS WITH OTHER DRAWINGS AND IF A CONFLICT EXISTS, THE CONTRACTOR SHALL NOT CARRY OUT THE AFFECTED WORK UNTIL THE OWNER HAS RESOLVED THE CONFLICT.

3. LIVE LOADS USED FOR FOUNDATION DESIGN: 30 PSF/SNOW DRIFT LOAD
ROOF------------------------------ 6 PSF
COLLATERAL------------------------ 25 PSF
GROUND SNOW----------------------- 40 PSF
CAT WALK-------------------------- 100 PSF/300 LBS. CONCENTRATED LOAD
STAIR----------------------------- 125 PSF
OBSERVATION DECK------------------ H20 TRUCK/18,000 CONCENTRATED LOAD
OPERATING FLOOR SLAB-------------- 90 MPH (EXPOSURE C)
WIND------------------------------
SEISMIC: E
SITE CLASS------------------------ I
USE GROUP------------------------- B
DESIGN CATEGORY------------------- 1.0
SEISMIC FACTOR ($I_E$)------------ $S_1$=0.0544, $S_S$=0.1241
SPECTRAL RESPONSE ACCELERATION---- $F_V$=3.5, $F_a$=2.5
SITE COEFFICIENTS-----------------
RESPONSE MODIFICATION FACTOR: 3(D): R=4
FRAME SYSYEM---------- 2(D): R=5
FRAME SYSYEM---------- $S_{DS}$=0.2068
DESIGN SPECTRAL RESPONSE ACCELERATION------- FROM PRE-ENGINEERING BUILDING MANUFACTURER
COLUMN REACTIONS-----------------

4. FOUNDATIONS:
FOOTINGS SHALL BEAR ON UNDISTURBED NATURAL SOIL WITH AN ALLOWABLE BEARING CAPACITY OF 2,500 PSF. THE MATERIAL AT FOOTING GRADE SHALL BE INSPECTED BY A GEOTECHNICAL ENGINEER PRIOR TO CONSTRUCTION. IF UNSUITABLE MATERIAL IS ENCOUNTERED THE FOOTINGS SHOULD BE FOUNDED ON COMPACTED FILL AS RECOMMENDED BY THE GEOTECHNICAL ENGINEER. SEE GEOTECHNICAL REPORT. BOTTOM OF ALL EXTERIOR FOOTINGS SHALL BE A MINIMUM OF 2' - 6" BELOW FINISH GRADE. CONTRACTOR IS RESPONSIBLE FOR MAINTAINING DRY SOIL FOR BEARINGS OF FOOTINGS. FOOTINGS SHALL NOT BE POURED IN WATER, ON MUD, OR ON FROZEN SOIL.

5. UNDERCUTTING:
REMOVE ALL UNSUITABLE LOW STRENGTH SOILS WITHIN THE BUILDING AREA. OVER-EXCAVATED UNSUITABLE SOILS REMOVED FROM WITHIN THE BUILDING AREA SHALL BE REPLACED WITH STRUCTURAL COMPACTED FILL IN COMPLIANCE WITH THE GEOTECHNICAL ENGINEER.

6. COMPACTED FILL:
THE FILL MATERIAL SHALL BE CLEAN, COARSE-GRAINED WELL-GRADED SAND WITH LITTLE OR NO FINES IN ACCORDANCE WITH ASTM D-2487, CLASSIFICATION SM. ON-SITE MATERIAL MAY BE USED WITH THE CONCURRENCE OF THE GEOTECHNICAL ENGINEER. THE FILL MATERIAL SHALL BE PLACED IN LAYERS WHICH, BEFORE COMPACTION, SHALL NOT EXCEED 8" IN DEPTH. EACH LAYER SHALL BE SPREAD UNIFORMLY AND EVENLY AND SHALL BE THOROUGHLY MIXED DURING THE SPREAD TO ENSURE UNIFORMITY OF MATERIAL IN EACH LAYER. EACH LAYER OF THE FILL SHALL BE UNIFORMLY COMPACTED TO NOT LESS THAN 95% OF THE MAXIMUM DRY DENSITY AS DETERMINED BY ASTM D-1557. THE GEOTECHNICAL ENGINEER SHALL OBSERVE AND TEST COMPACTED FILL. FOUNDATION WALL SHALL BE CONTINUOUSLY BRACED AND SUPPORTED LATERALLY UNTIL THE WAREHOUSE SLAB IS IN PLACE AND HAS REACHED A MINIMUM OF 75% OF ITS DESIGN STRENGTH.

7. CONCRETE:
CONCRETE WORK SHALL CONFORM TO ALL PROVISIONS OF THE "SPECIFICATIONS FOR STRUCTURAL CONCRETE FOR BUILDINGS" (ACI 301) AND TO THE "BUILDING CODE REQUIREMENTS FOR REINFORCED CONCRETE (ACI 318)." ALL CONCRETE SHALL HAVE A MINIMUM 28 DAY COMPRESSIVE STRENGTH OF 4,000 PSI. CONCRETE PERMANENTLY EXPOSED TO WEATHER SHALL BE AIR-ENTRAINED 4% - 6% BY VOLUME. ALL REINFORCING BARS SHALL CONFORM TO ASTM A-615, GRADE 60. ALL WELDED WIRE FABRIC SHALL CONFORM TO ASTM A-185. SHOP BEND ALL REBARS.

8. STRUCTURAL COLD-FORMED STEEL FRAMING:
ALL COLD-FORMED METAL FRAMING SHALL BE DESIGNED, FABRICATED, AND ERECTED IN ACCORDANCE WITH THE AISI "COLD-FORMED STEEL DESIGN MANUAL" INCLUDING THE "SPECIFICATION FOR THE DESIGN OF COLD-FORMED STEEL STRUCTURAL MEMBER". ALL COLD-FORMED METAL MEMBERS SHALL BE THE SIZE, GAGE, AND CROSS SECTION INDICATED ON THE DRAWINGS. THE CONTRACTOR SHALL SUBMIT SHOP DRAWINGS INDICATING THE SIZE, LOCATION, AND THE CONNECTION DETAILS FOR ALL MEMBERS. ALL COLD-FORMED METAL MEMBERS 16 GAGE THICKNESS OR HEAVIER SHALL BE PRODUCED FROM STEEL CONFORMING TO ASTM A-446 WITH A MINIMUM YIELD STRENGTH OF 50 KSI. ALL MEMBERS 18 GAGE OR LIGHTER SHALL BE PRODUCED FROM STEEL CONFORMING TO ASTM A-446 WITH A MINIMUM YIELD OF 33 KSI. GALVANIZING OF ALL COLD-FORMED MEMBERS SHALL MEET THE REQUIREMENTS OF ASTM A-525 WITH A MINIMUM G 60 COATING. WELDING OF COLD-FORMED METAL MEMBERS SHALL BE PERFORMED BY WELDERS CERTIFIED IN THE WELDING OF LIGHT GAGE COLD-FORMED MEMBERS. WELDING OPERATIONS, CERTIFICATIONS OF WELDING, AND PREPARATION OF MEMBERS FOR WELDING SHALL BE COMPLETED IN ACCORDANCE WITH AWS D1.1 AND AWS D1.3

9. MISCELLANEOUS STRUCTURAL STEEL:
ALL STRUCTURAL STEEL SHALL BE ASTM A-36 AND SHALL BE FABRICATED AND ERECTED IN ACCORDANCE WITH THE LATEST "SPECIFICATIONS FOR DESIGN, FABRICATION AND ERECTION OF STRUCTURAL STEEL FOR BUILDINGS" OF THE AMERICAN INSTITUTE OF STEEL CONSTRUCTION. FIELD CONNECTIONS SHALL BE MADE USING 3/4" DIAMETER ASTM A-325 BOLTS. SHOP CONNECTIONS SHALL BE WELDED USING E-70 XX ELECTRODES. ANCHOR BOLTS SHALL BE ASTM A-307. PAINT ALL STEEL WITH ONE COAT OF ZINC-RICH URETHANE PRIMER AND ONE FINISH COAT OF POLYURETHANE.

10. PREFABRICATED STRUCTURE:
THE PRE-ENGINEERED BUILDING SHALL BE DESIGNED, FABRICATED AND ERECTED IN ACCORDANCE WITH THE METAL BUILDING MANUFACTURER'S ASSOCIATION (MBMA). THE PRE-ENGINEERED BUILDING SHALL BE 200' X 120' X 30'/20' AND MANUFACTURED BY STAR BUILDING SYSTEMS.

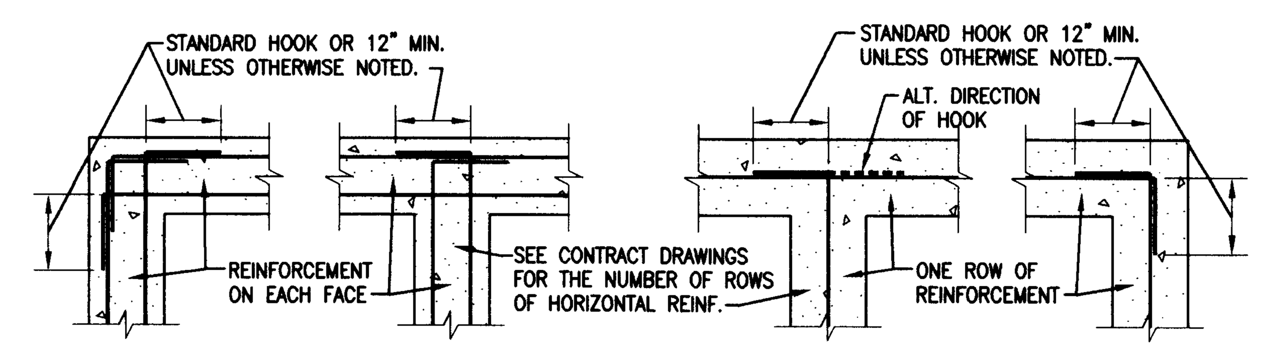


NOTE:
THE ABOVE DETAILS SHOW THE ARRANGEMENT OF THE PRINCIPAL HORIZONTAL REINFORCEMENT. FOR SPECIFIC REQUIREMENTS OF THE HORIZONTAL REINFORCEMENT (SUCH AS GREATER HOOK EXTENSION, ADDITIONAL REINFORCEMENT, ETC.), SEE PLAN, SECTIONS AND DETAILS OF THE CONTRACT DRAWINGS.

WHERE VERTICAL CONSTRUCTION JOINT IS LOCATED ADJACENT TO WALL INTERSECTION, ALL REINFORCEMENT (INCLUDING HOOKS) SHALL EXTEND A MINIMUM OF 30 BAR DIAMETERS BEYOND CONSTRUCTION JOINT.

VERTICAL REINFORCEMENT NOT SHOWN. SEE CONTRACT DRAWINGS FOR PLACEMENT OF VERTICAL REINFORCEMENT.

TYPICAL WALL INTERSECTION DETAILS

NOT TO SCALE

| REVISIONS | | | |
|---|---|---|---|
| NO. | DATE | BY | DESCRIPTION |

SEAL: STATE OF MARYLAND GEOFFREY A. TIZARD REGISTERED PROFESSIONAL ENGINEER

CENTRAL LANDFILL FACILITY SITE
MUNICIPAL SOLID WASTE RECOVERY FACILITY
WORCESTER COUNTY, MARYLAND

RETAINING WALL AND LOADING DOCK CROSS SECTIONS AND DETAILS

EA ENGINEERING, SCIENCE, AND TECHNOLOGY
Loveton Center
15 Loveton Circle
Sparks, Maryland 21152
(410) 771-4950

| | |
|---|---|
| DATE | MAY 2002 |
| DESIGNED BY | DOK |
| DRAWN BY | FDV |
| CHECKED BY | GAT |
| PROJECT MANAGER | GAT |
| PROJECT NUMBER | 10609.14 |
| SCALE | AS SHOWN |
| FILE NAME | S-4 |
| DRAWING NUMBER | S-4 |
| SHEET NUMBER | 20 OF 31 |

FILE: (LOVETON) Q:\PROJECTS\1060914\CONTRACT DRAWINGS\S-4.DWG 6-3-02