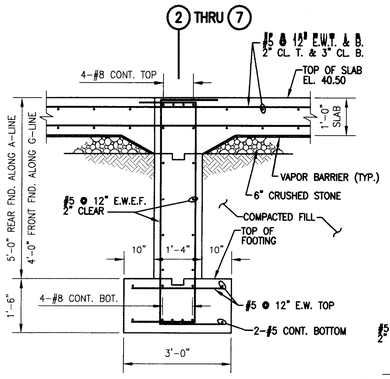

SECTION A / S-3
SCALE: 1/2"=1'-0"

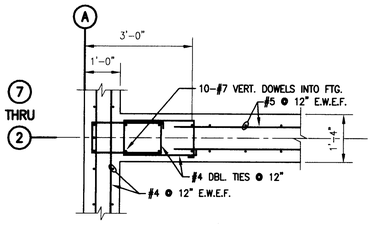

SECTION B / S-3
SCALE: 1/2"=1'-0"

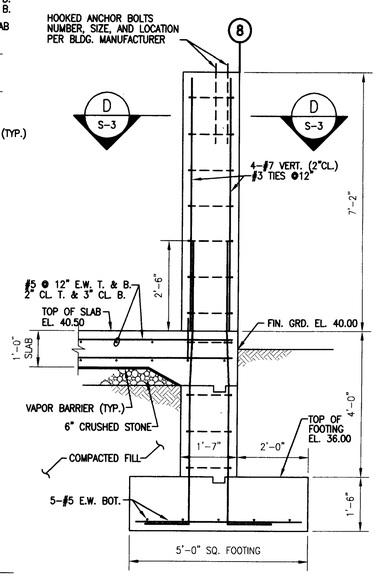

SECTION C / S-1
SCALE: 1/2"=1'-0"

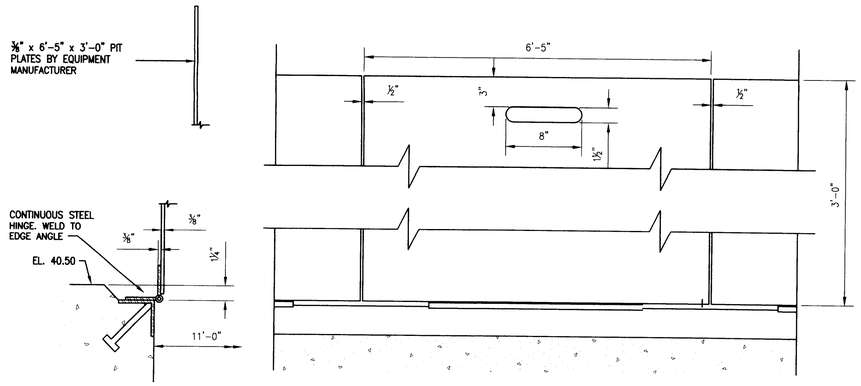

EDGE ANGLE AND PIT PLATE SECTION DETAIL 9 / S-3
NOT TO SCALE

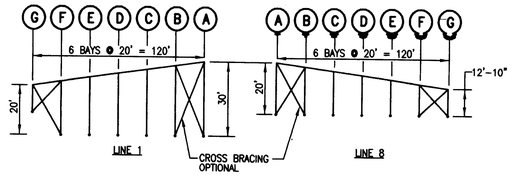

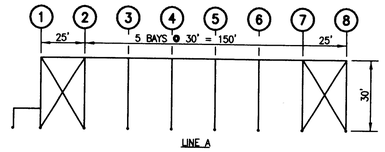

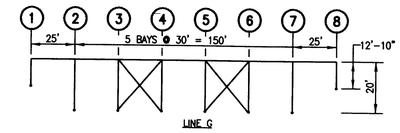

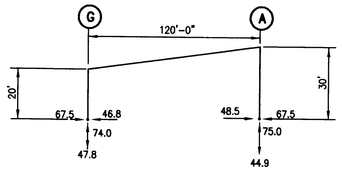

FRAME LINE 2 THRU 7

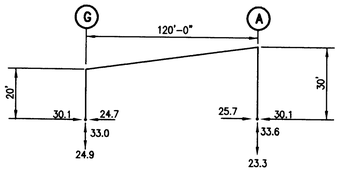

LINES 1 AND 8

METAL BUILDING REACTION DIAGRAMS

NOTE: ALL LOADS IN KIPS

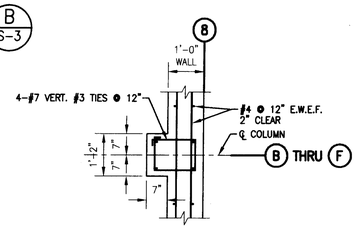

SECTION D / S-3
SCALE: 1/2"=1'-0"

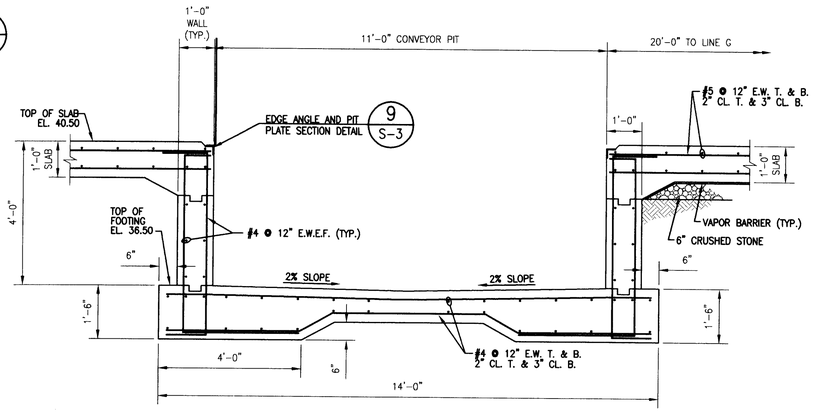

SECTION E / S-1
SCALE: 1/2"=1'-0"

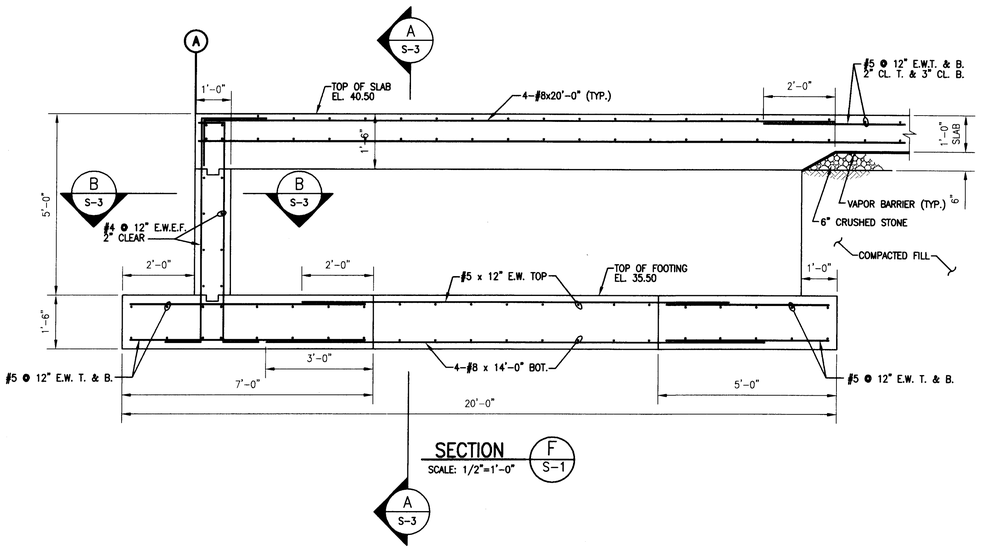

SECTION F / S-1
SCALE: 1/2"=1'-0"

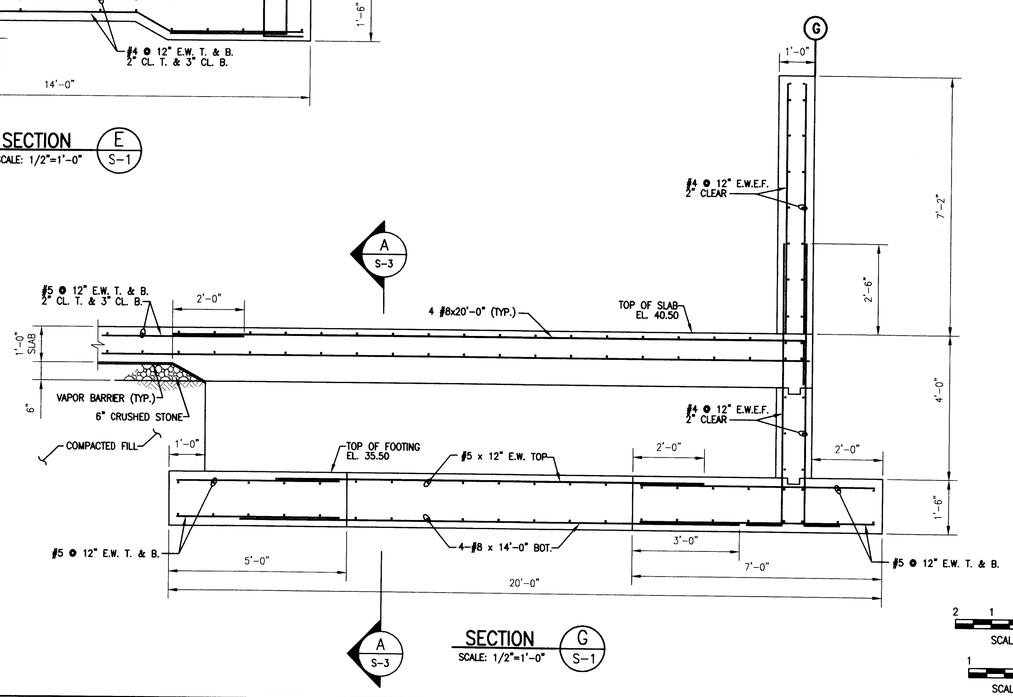

SECTION G / S-1
SCALE: 1/2"=1'-0"

2 1 0 1 2 3
SCALE: 1/2" = 1'-0"

1 0 1
SCALE: 1" = 1'-0"

NO.	DATE	BY	DESCRIPTION

REVISIONS

SEAL

STATE OF MARYLAND
GEORGE A. GREBERMAN
No. 19324
PROFESSIONAL ENGINEER

CENTRAL LANDFILL FACILITY SITE
MUNICIPAL SOLID WASTE RECOVERY FACILITY
WORCESTER COUNTY, MARYLAND

PEDESTAL DETAILS

EA ENGINEERING, SCIENCE, AND TECHNOLOGY
Loveton Center
15 Loveton Circle
Sparks, Maryland 21152
(410) 771-4950

DATE	MAY 2002
DESIGNED BY	DOK
DRAWN BY	FDV
CHECKED BY	GAT
PROJECT MANAGER	GAT
PROJECT NUMBER	10609.14
SCALE	AS SHOWN
FILE NAME	S-3
DRAWING NUMBER	S-3
SHEET NUMBER	19 OF 31

FILE: G:\ACTIVE\ 10609.14\CONTRACTDRAWINGS\S-3.DWG 6-3-02