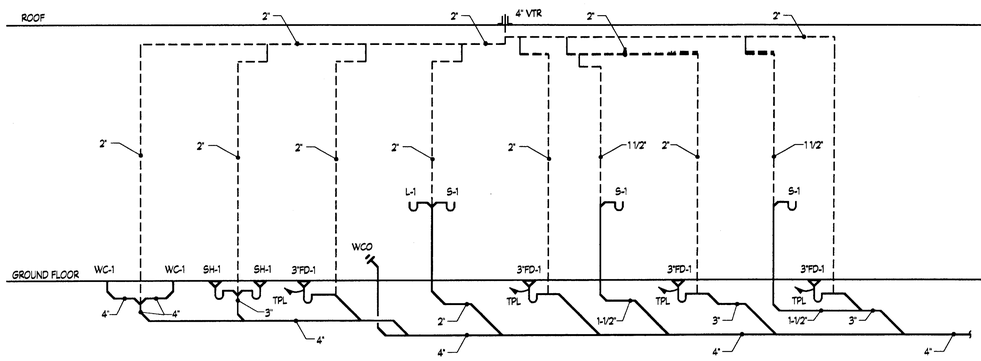

SANITARY RISER DIAGRAM
NO SCALE

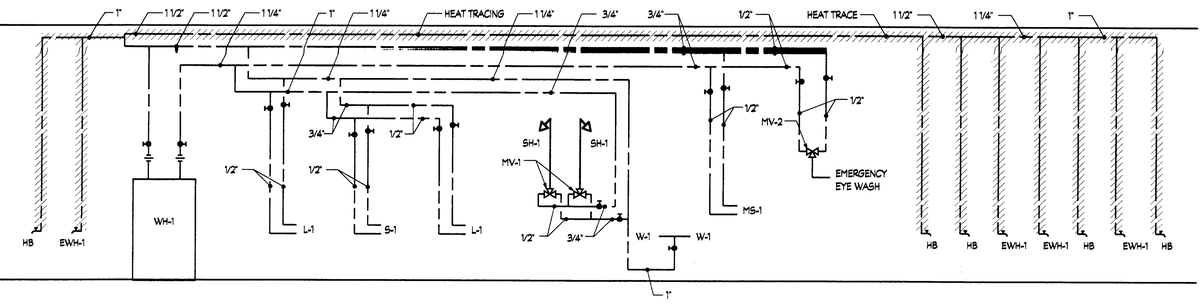

DOMESTIC WATER RISER DIAGRAM
NO SCALE

SPRINKLER RISER NOTES: (#)

1. DOUBLE CHECK BACKFLOW PREVENTOR WITH DOUBLE SHUT-OFF VALVES. (VALVES TO BE TAMPERED')
2. DRY SPRINKLER SYSTEM WITH DRY PIPE VALVE, AIR-MAINTENANCE DEVICE, AIR COMPRESSOR AND QUICK OPENING DEVICE. EACH SYSTEM TO INCLUDE THE FOLLOWING:
   - LOW AIR ALARM SWITCH
   - WATER FLOW PRESSURE SWITCH
3. STANDARD PROJECTING 6 X 2 1/2" X 2 1/2" X 2 1/2" FIRE DEPARTMENT CONNECTION.

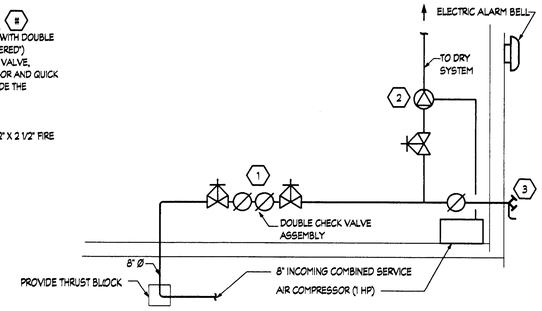

SPRINKLER RISER
NO SCALE

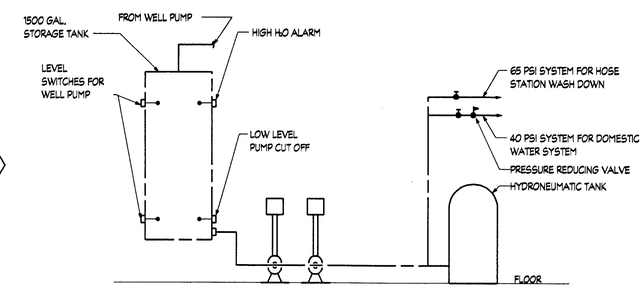

DOMESTIC SCHEMATIC
NO SCALE

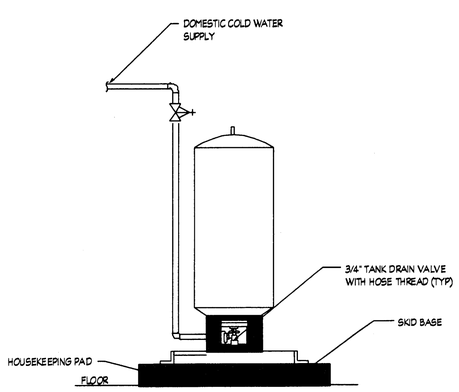

HYDROPNEUMATIC TANK DETAIL
NO SCALE

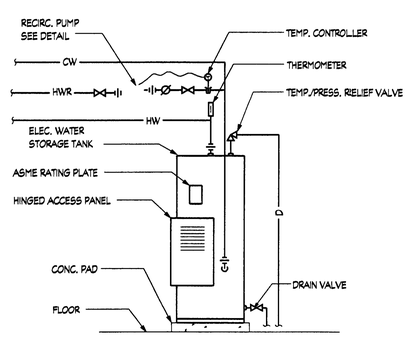

ELECTRIC HOT WATER HOOK-UP AND FLOW DIAGRAIM
NO SCALE

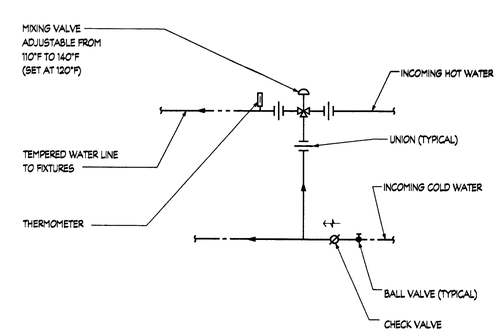

MIXING VALVE DETAIL
NO SCALE

Allen & Shariff
CORPORATION
7061 Deepage Dr
Columbia, Md 21045
410-381-7100 Fax: 410-381-7110
1-800-ASC-4-MEP
(1-800-272-4637)

REVISIONS			
NO	DATE	BY	DESCRIPTION

SEAL

CENTRAL LANDFILL FACILITY SITE
MUNICIPAL SOLID WASTE RECOVERY FACILITY
WORCESTER COUNTY, MARYLAND

RISER DIAGRAMS

EA ENGINEERING, SCIENCE, AND TECHNOLOGY
Loveton Center
15 Loveton Circle
Sparks, Maryland 21152
(410) 771-4950

DATE	MAY 2002
DESIGNED BY	KP
DRAWN BY	KP
CHECKED BY	RH
PROJECT MANAGER	GAT
PROJECT NUMBER	10609.14
SCALE	NONE
FILE NAME	PLUMBING RISER DIAGRAMS AND DETAILS
DRAWING NUMBER	P-4
SHEET NUMBER	31 OF 31

FILE: G:\CAD\TOM G & PROJECTS\10609\PLCONTRACT\10609\P-4.DWG 02-26-02

ASC PROJECT #01068