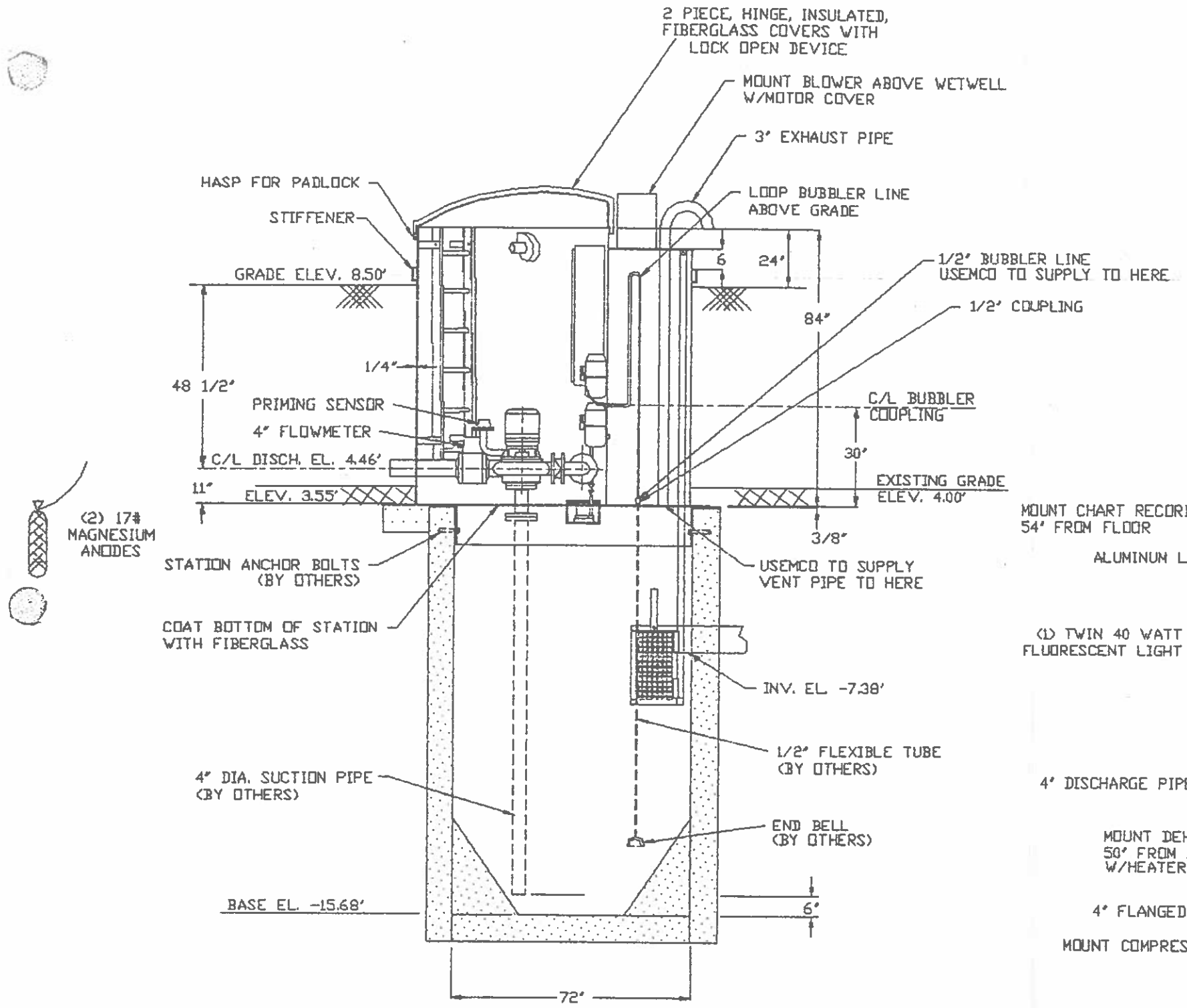

PAINT REQUIREMENTS:

BOTTOM OF EXTERIOR
60 MIL FIBERGLASS/EPOXY
EXTERIOR & INTERIOR
6 MIL EPOXY PAINT

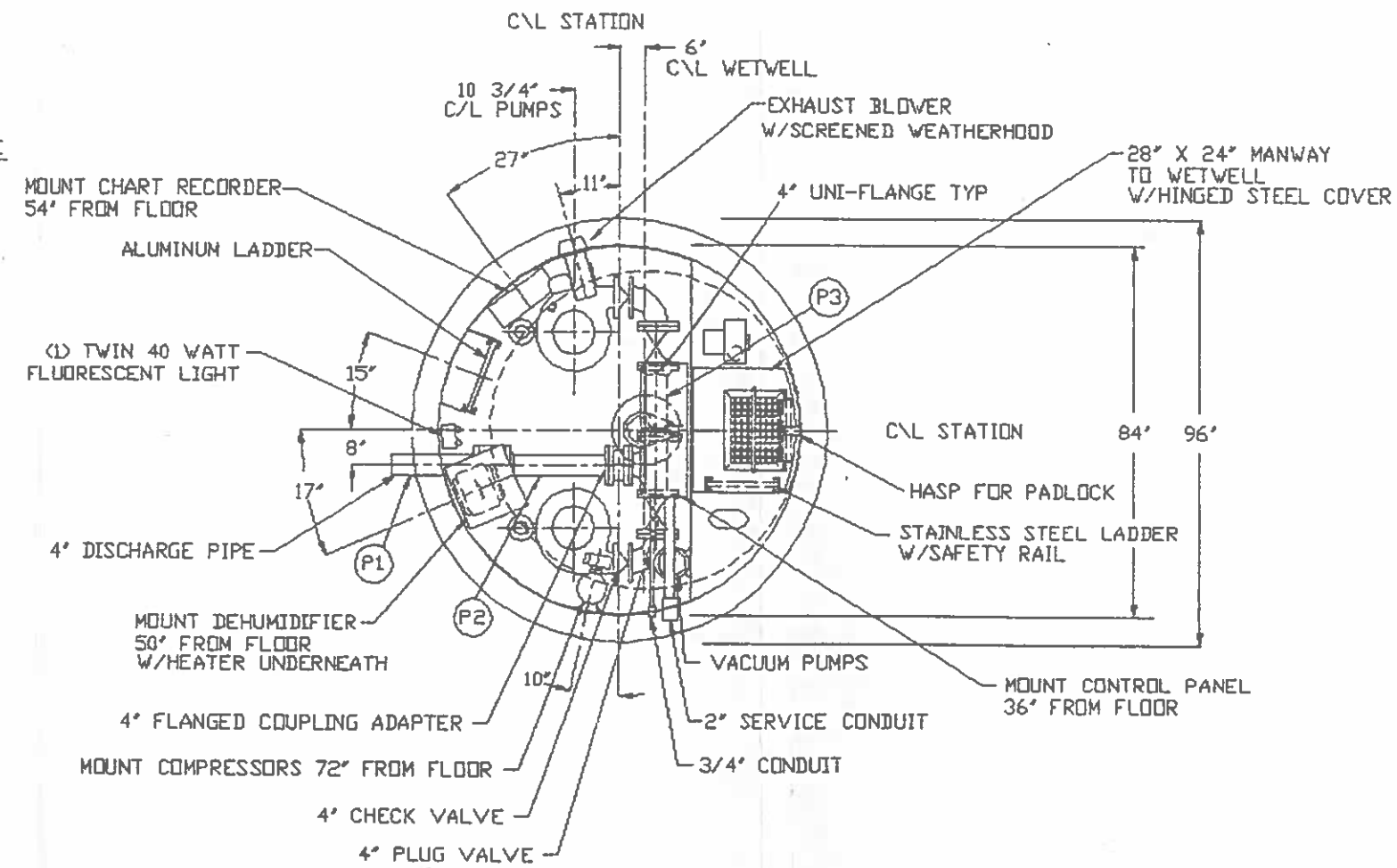

NOTE:

PIPING, EXTERNAL TO THE LIFT STATION MUST BE INDEPENDENTLY SUPPORTED.

REV. NO.	REVISION	BY / CHK'D	DATE	DESIGNED BY:	DATE	USEMCO INCORPORATED
1	GENERAL REVISIONS	TRM	12/28 90	DRAWN BY: D.G.	DATE 2/22	P.O. BOX 363 (608) 372-5911 TOMAH WI. 54660
2	ADDED BASKET STRAINER	J.B.	2/5 91	CHECKED BY: W.K.	DATE 90	DESCRIPTION: WORCHESTER CO., MD NANTUCKET POINT-EDGEWATER ACRES
3	ADDED BASKET STRAINER	J.B.	2/28 91	SCALE		DWG. NO. / JOB NO. 4890